Department of Defense
Legacy Resource Management Program

04-219

Performance Testing of Historically Appropriate Blast-Resistant Windows
Volume 1 – Background and Testing Program

Julie L. Webster and Patrick E. Reicher,
ERDC-CERL

September 2007

Approved for public release; distribution is unlimited.

ERDC/CERL TR-07-39

Construction Engineering Research Laboratory

US Army Corps of Engineers®
Engineer Research and Development Center

Performance Testing of Historically Appropriate Blast-Resistant Windows

Volume 1 – Background and Testing Program

Julie L. Webster and Patrick E. Reicher

September 2007

Approved for public release; distribution is unlimited.

Approved for public release; distribution is unlimited.

ERDC/CERL TR-07-39
September 2007

Performance Testing of Historically Appropriate Blast-Resistant Windows

Volume 1 – Background and Testing Program

Julie L. Webster and Patrick E. Reicher

Engineer Research and Development Center
Construction Engineering Research Laboratory
PO Box 9005
Champaign, IL 61826-9005

Final Report

Approved for public release; distribution is unlimited.

Prepared for Legacy Resource Management Program
Washington, DC

Under Reimbursable Order 97/0100/701/A/W31RY041533803/PO

ABSTRACT: This study leverages findings of Legacy Project 03-176, *Antiterrorism Measures for Historic Properties*. The authors identified few sources of UFC 4-010-01-compliant replacement windows appropriate for historic building applications. Most window suppliers will quote a job to produce prototype windows, but they (1) have no current blast test data for their product, and (2) have no experience with historic building applications. This suggested a need for window testing to help ensure that DoD has multiple trusted sources for historically compatible blast-resistant window products.

DISCLAIMER: The contents of this report are not to be used for advertising, publication, or promotional purposes. Citation of trade names does not constitute an official endorsement or approval of the use of such commercial products. All product names and trademarks cited are the property of their respective owners. The findings of this report are not to be construed as an official Department of the Army position unless so designated by other authorized documents.

DESTROY THIS REPORT WHEN NO LONGER NEEDED. DO NOT RETURN IT TO THE ORIGINATOR.

Contents

List of Figures and Tables vi

Preface viii

1 Introduction 1

Background 1
Objectives 2
Approach 2
Scope 3
Dissemination of findings and technology transfer 3

2 Window Functions, Components, and Construction 2

Conventional window assemblies 2
Functions 2
Components and terminology 2
Types 3
Blast window performance environment 4
Dynamics of an explosion 4
Window response under blast pressures 6
Glass breakage injuries to building occupants 7
Glazing materials 9
Monolithic 10
Laminated 11
Insulating 11
Blast protection through balanced design 12
Upgrading existing windows for blast resistance 13
Retrofit alternatives 15
Fragment retention film 15
Glazing replacement 15
Framing system reinforcement 15
Catch systems 16
Secondary window systems 16
Replacement window systems 17
Rigid frame systems 17
Flexible frame systems 18
Muntin arrays 18
Market availability of blast-resistant window systems 19
Historic preservation issues 20
National Register eligibility and the SOI standards 21
SOI standards for new additions and alterations 22
SOI rehabilitation standard 9 22
SOI rehabilitation standard 10 24
Dual compliance with antiterrorism and historic preservation mandates 24

3 Pre-Design Considerations for Dual Compliance 26

Pre-design considerations for UFC 4-010-01 compliance 26
Determining the baseline threat *27*
Standoff concepts 27
Design explosive charge weight 30
Level of protection *30*
Pre-design considerations for historic preservation compliance 32

4 Designing Historically Compatible Blast Windows that Comply with UFC 4-010-01 34
Window component criteria 36
Glazing material selection *36*
Window frame selection and design *39*
Framing requirements 40
Secondary framing members 41
Window profile: material composition and operability 41
Difficulties associated with multi-sash window units 44
Anchorage and structural strength *46*
Connection requirements 47
Blast-resistant window anchors 47
Supporting structural elements 48
Rehabilitation considerations for masonry construction 49
Dual compliance issues and opportunities 50

5 Computational Analysis and Live Blast Testing 52
The need for alternate methods of analysis and testing 52
Predictive modeling alternatives 53
Finite element methods *53*
Single-degree-of-freedom modeling *53*
Pressure-impulse diagrams *53*
Software 54
WinDAS *55*
HAZL *55*
Live blast testing 55
Open air arena testing *56*
Shock tube testing *57*
DoD performance-based testing standard using ASTM F1642 59
ASTM F1642 general testing procedure *60*
ASTM F1642 hazard ratings *60*
Applicability limitations of protective window products 62
Unintended consequences of modifying glazing pane dimensions *63*
Installation considerations *63*

6 Testing Program 66
Window type selection 66
Hung window *66*
Factory-type window *68*
Assumed building and site variables 72
Window manufacturers and agreements 73
Window vendor qualification *73*
Cooperative Research and Development Agreements (CRADAs) *74*

Test facilities and testing trials 75
Blast test facility qualification and acquisition *75*
Blast test facility investigation plan and implementation *76*
Testing methodology 76
Installing the window specimens 79
Documentation 80

7 Conclusions and Recommendations 82
Conclusions 82
Testing program summary *82*
Blast performance results *84*
Historic preservation performance results *86*
Window and testing costs *88*
Typical blast resistant window costs 88
Typical blast testing costs 89
Recommendations 90

References 92

Abbreviations and Acronyms 95

Appendix A: SOI Standards for Rehabilitation 97

Appendix B: Directory of Blast Test Facilities and Window Manufacturers 98
Blast test facilities 98
Window manufacturers 99

List of Figures and Tables

Figures

Figure 1.1. Representative window system. 3
Figure 1.2. Window types (NAFS). 4
Figure 1.3. Pressure versus Time graph (Smith and Rose 2002). 5
Figure 1.4. Pre- and post-blast test views of laminated glazing. Note that fractured glazing remains in its frame (Graham Architectural Products website). 10
Figure 1.5. Diagram showing the energy/load path of a blast wave. 12
Figure 3.1. Sliding (left) and hung (right) windows (ERDC-CERL 2007, 2004). 42
Figure 3.2. Awning (left) and hopper (right) windows (ERDC-CERL 2007). 43
Figure 3.3. Factory-style muntins and mullions (ERDC-CERL 2007). 43
Figure 3.4. Awkward resolution of casement hardware in former double-hung window opening (Army 2004). 46
Figure 3.5. Hilti® threaded rod (above) and sleeve (below) anchors (Hilti® website). 48
Figure 4.1. Example of a P-I diagram (WinDAS 2001). 54
Figure 4.2. Open air arena window testing (WinDAS 2001). 57
Figure 4.3. Shock tube (GSL 2004). 58
Figure 4.4. Hazard rating criteria for ASTM F1642 (ASTM F1642-04). 61
Figure 1.1. Elevation of representative historic double-hung window unit in a 3 ft 6 in. by 6 ft 4in. brick masonry opening. 67
Figure 1.2. Muntin and meeting rail details for representative historic double-hung window unit.68
Figure 1.3. Elevation of representative historic factory window unit in a 3 ft 6 in. by 5 ft 6in. CMU opening. 70
Figure 1.4. Sill and head details for representative historic factory window unit. 71
Figure 1.5. Jamb detail for representative historic factory window unit. 72
Figure 1.6. Shock tube used in this testing program (PDC 2007). 77
Figure 1.7. Gap in shock tube used to simulate negative phase pressures (PDC 2007). 77
Figure 1.8. Shock tube side of the reaction structure (PDC 2007). 78
Figure 1.9. Hung window specimen (left) and factory window specimen (right) installed in the reaction structure (PDC 2007). 80

Tables

Table 1.1. Airblast parameters for 50 lb. TNT detonation (Smith and Renfroe 2005). 6
Table 1.2. Comparison of window retrofit applications for blast resistance. 14
Table 2.1. Summary of DoD building categories. 28
Table 2.2. Levels of protection for new and existing buildings (UFC 4-010-01, Table 2-1). 31
Table 2.3. Relationship between DoD levels of protection and ASTM glazing hazard ratings. 32
Table 3.1. Summary of UFC B-3.1 (Standard 10) provisions. 34

Table 3.2. Summary of UFC B-3.1.1, Prescriptive Requirements. 35
Table 3.3. Factors associated with the design of laminated glass assemblies. 37
Table 3.4. Laminated Glass Thickness Selection for Single Pane Windows (UFC 4-010-01, Table B-2). 38
Table 1.1. Information collected in the prequalification worksheet. 74
Table 2.1. Summary of test program process. 82
Table 2.2. Summary of all airblast testing trials. 85
Table 2.3. Window characteristics used to evaluate historic preservation performance. 86
Table 2.4. Summary of test facility costs. 89
Table 6.5. Secretary of the Interior's Standards for Rehabilitation (NPS 1995) 97

Preface

This study was conducted by the U.S. Army Engineer Research and Development Center (ERDC) for the Office of the Deputy Under Secretary of Defense for Environmental Security under the Legacy Resource Management Program; Reimbursable Order 97/0100/701/A/W31RYO41533803/PO, *Blast Testing of Historically Appropriate Blast-Resistant Windows*, dated 23 July 2004. The technical monitor was L. Peter Boice, Director, ODUSD (ES) EQ-LP.

The work was performed by the Land and Heritage Conservation Branch (CN-C) of the Installations Division (CN), Construction Engineering Research Laboratory (CERL). The project manager was Julie L. Webster. Christopher M. White was Chief, CEERD-CN-C, and Dr. John T. Bandy was Chief, CEERD-CN during preparation of this report. Dr. William D. Severinghaus was the Technical Director of the Military Lands business area. Dr. Kirankumar V. Topudurti was the Deputy Director of CERL, and Dr. Ilker R. Adiguzel was Director.

Blast consulting and review services were provided by Edward J. Conrath and William J. Veys of the U.S. Army Corps of Engineers-Protective Design Center, Omaha, NE.

The Commander and Executive Director of ERDC was COL Richard B. Jenkins and the Director was Dr. James R. Houston.

1 Introduction

Background

Conventional building components are not designed to withstand the excessive loads arising from a terrorist bomb attack. Common annealed glass windows shatter at very low pressures, and the resulting fragmentation debris is widely understood to be the single greatest cause of injuries to building occupants after a bomb blast. Research activities by the Department of Defense (DoD), General Services Administration, and the U.S. State Department have led to significant improvements in protecting occupants of conventional government facilities from blast effects, and DoD maintains a standards document that specifies minimum antiterrorism (AT) standards for its more densely occupied buildings. That document, Unified Facilities Criteria (UFC) 4-010-01, directs considerable attention toward the issue of window performance in a blast environment.

Manufacturers are continually introducing innovative methods and products for which persuasive-sounding blast performance claims are made. Products include both window modification hardware (e.g., antifragmentation devices and fragment catchers) and full replacement systems. Blast-resistant replacement window systems may often represent the best choice for meeting the occupant protection requirements of UFC 4-010-01 where adequate building setback (i.e., *standoff* in terms of the UFC) is not available. The problem for military buyers is that manufacturer claims for many available systems have not been statically or dynamically analyzed or tested under the ASTM International testing standard, namely ASTM F1642, *Standard Test Method for Glazing Systems Subject to Airblast Loadings*, as stipulated by UFC 4-010-01.

The procurement of blast-resistant windows is further complicated when the building to be protected is listed or eligible for listing on the National Register of Historic Places. Such buildings, referred to in this report as *historic buildings*, must be rehabilitated according to the *Secretary of the Interior's Standards for Rehabilitation* (36 CFR Part 67) in order to comply with the *National Historic Preservation Act of 1966* as amended (16 USC 470). However, most blast-resistant windows currently on the market do not comply with those standards.

DoD personnel and contractors who procure blast-resistant window systems for historic military buildings need manufacturer-independent test data to be confident that products comply with UFC 4-010-01. In consideration of the fact that professional expertise also is required to determine whether a replacement window complies with 36 CFR Part 67, individuals responsible for procurement are likely to require guidance on selecting historically appropriate replacements for existing windows. To that end, the project design team must include a historic preservation professional who satisfies the *Secretary of the Interior's Professional Qualifications Standards* (36 CFR Part 61, Appendix A) to ensure that window choices and installation methods and techniques are compliant with 36 CFR Part 67.

Objectives

The principal objective of this research is to provide DoD with manufacturer-independent test data for historically compatible blast-resistant windows and interpret the findings in terms of the minimum threats and levels of protection defined in UFC 4-010-01. A secondary objective is to provide DoD with a directory of blast test facilities, blast-resistant window manufacturers, and historically appropriate window products which, as determined by the testing program data and evaluation by a historic architect, comply with both UFC 4-010-01 and 36 CFR Part 67.

Approach

Research began with a literature review to explore blast resistant window performance, testing, and related issues. Then it was necessary to identify blast resistant window vendors thought to have manufacturing capabilities and products suitable for historic building applications. This was accomplished using referrals, the Internet, and introductory correspondence. Based on company profiles, brochures, test data, reports, and completed projects, 18 capable manufacturers were identified. These companies were solicited for interest in the testing program. Interested parties completed a *Prequalification Worksheet* developed by the project team that outlined blast testing program parameters and requirements. Vendor input on the worksheet provided the basis for final participant selections. Each finalist then entered into a Cooperative Research and Development Agreement (CRADA) with ERDC-CERL that established roles and responsibilities for program participation. Window specimens manufactured under the

CRADA were shipped directly to the contract test facility. Blast performance testing occurred over a 2-day period in August 2007 and the contract test facility subsequently provided the ASTM F1642-compliant window test reports found in this technical report.

Scope

Since the research focus was on *replacement* window systems, protective glazing, structural sealant, applied safety films, independent catcher products (e.g., curtains or shades), secondary window systems, and window system anchorage were outside the scope of this project. The scope was further limited by the selected window types (hung and factory), building categories (inhabited and billeting), location (within a controlled perimeter), level of protection (low), testing method (shock tube), and testing parameters (explosive weight II at 60 ft standoff).

Dissemination of findings and technology transfer

Research results and ASTM F1642-compliant window test reports are presented in this comprehensive technical report. In addition to the test results, the technical report includes a directory of known manufacturers of historically appropriate blast resistant replacement windows. For each manufacturer, the directory provides marketing or technical points of contact, addresses, websites, phone and fax numbers, and E-mail addresses (as available).

DoD and DoD contractors can access the technical report online at the Defense Environmental Network & Information eXchange (DENIX) and on the U.S. Army Corps of Engineers Protective Design Center website: https:\\pdc.usace.army.mil

2 Window Functions, Components, and Construction

Conventional window assemblies

Functions

Windows are a major contributor to the comfort and safety of building occupants. Their primary purpose is to allow daylight through the exterior envelope into the building, providing outdoor sightlines while shielding occupants from the exterior environment and noise. Windows also allow for natural ventilation and provide alternative routes into or out of the building in cases of fire, natural disaster, or terrorist attack. If window assemblies or components are not properly designed, they can actually defeat the purposes for which they were intended. The best window system for any application is one that serves its purposes effectively while being durable, economical, and simple to maintain throughout its life cycle.

Components and terminology

All window units consist of two main components: the glazing and the framework. The term *glazing* refers to the transparent, translucent, or decorative infill material — typically glass — held in place by framing members. The *framework* consists of primary and secondary framing elements, called the *sash* and *muntins*, respectively. The sash may be either movable or fixed, and this functionality defines window type. The sash is made up of *stiles* (vertical components) and *rails* (horizontal components). The physical interlock where the sash framework overlaps and constrains the glazing, called *frame bite*, is usually equal on all sides of a window. The muntin framework within the sash serves to divide glazing into separate vision areas. Historically, structural muntins served to hold small individual *lites* (i.e., panes) of glass together as a single assembly, although in modern conventional windows they are usually decorative. *Mullions* are intermediate structural members, most often positioned vertically to join two or more window units together in a series (NAFS 2005).

In this report a *window system*, also referred to as a *glazing system*, is defined as an assembly of framing elements, glazing, and anchorage devices

that connect the assembly to the building's superstructure (ASTM F1642-04) (Figure 2.1). Window systems are set into *rough openings* in the building envelope. The arrangement of these openings is termed *fenestration*. Window units are set in the openings and attached to the building via the *window frame*. For square or rectangular units, this enclosing structure is composed of *jambs*, the *head*, and the *sill*, which form the sides, top, and bottom of the window frame respectively. For windows which are inoperable, the glazing may be connected directly to the window frame thus precluding the presence of sash framework (NAFS 2005).

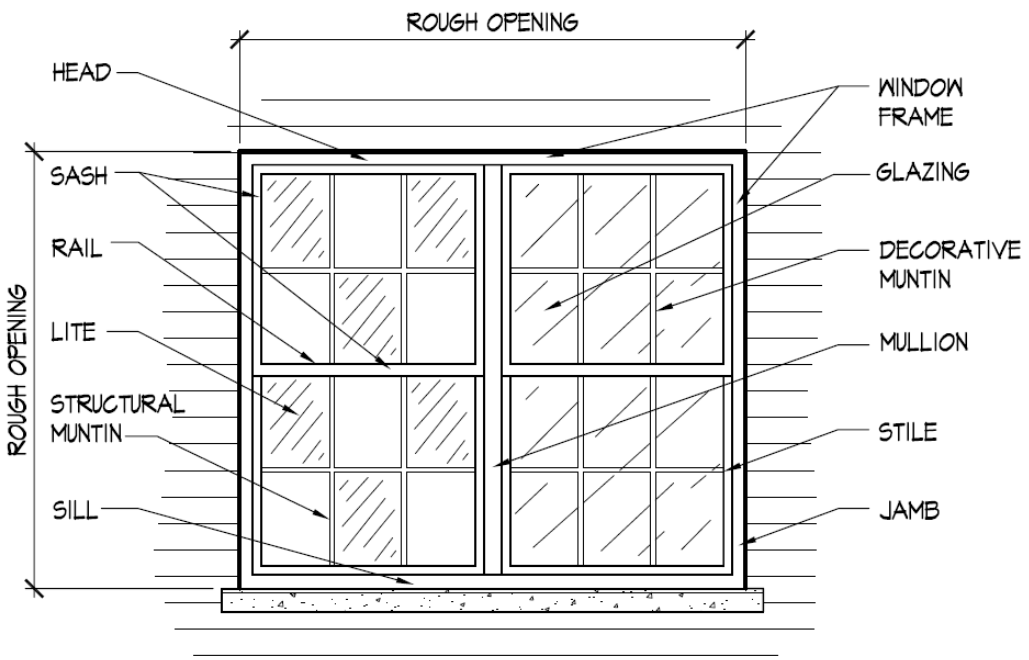

Figure 2.1. Representative window system.

Types

Window types are distinguished by their sash arrangement and function (Figure 2.2). Fixed sash windows are *inoperable*, meaning that they do not open. *Single-hung* windows consist of one fixed sash and a vertically sliding sash that is typically located in the lower position. *Double-hung* windows have two vertically movable sashes, with the bottom one typically positioned inside the upper one. *Triple-hung* windows are tall, three-sash units typically provided for access to porches or balconies in place of doors; at least two of the three sashes are operable, allowing the window to open to two-thirds its full height. Basic *sliding* windows have two sashes,

at least one of which moves horizontally in a track past the other. *Casement* windows consist of one or more sashes, hinged on one side, which pivot inward or outward similar to a door. *Hopper* windows are bottom-hinged units that tilt inward to open; conversely, *awning* windows are hinged at the top and open outward to an angled position (NASF 2005).

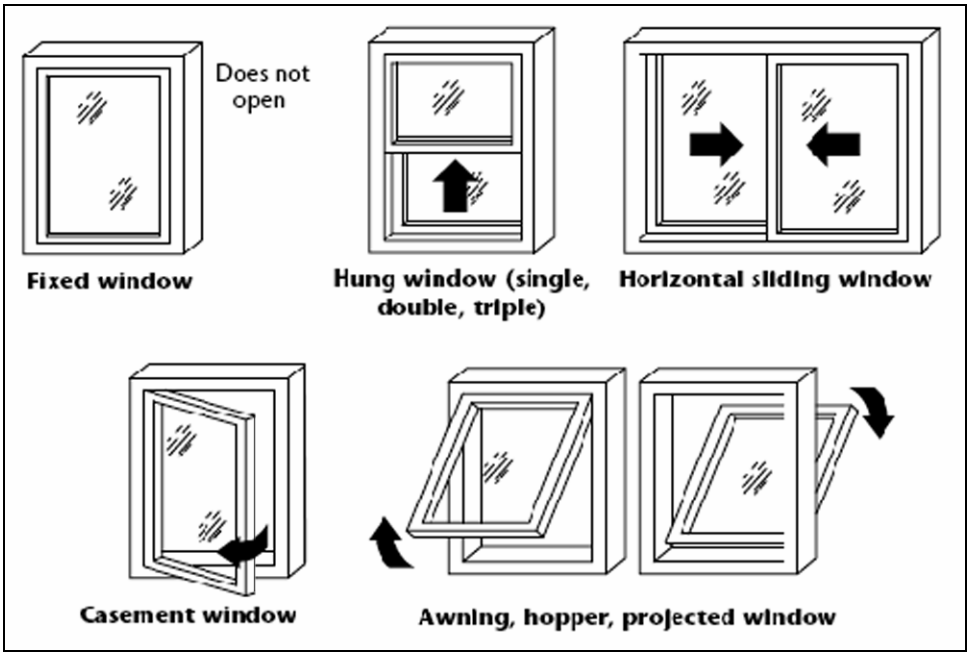

Figure 2.2. Window types (NAFS).

Blast window performance environment

For purposes of antiterrorism, it is assumed that aggressors will target occupied buildings and use explosive devices in close proximity to them. Because the blast wave hits the building façade (cladding, windows, and doors) first, it is considered the first line of defense against such an explosion. Since the façade separates building occupants from exterior threats, it is imperative that at-risk buildings incorporate measures that effectively mitigate glass-related hazards associated with such attacks (Smith 2003).

Dynamics of an explosion

When a bomb detonates, the explosive material undergoes a chemical reaction that releases great amounts of energy in an extremely short amount of time. The resulting gaseous fireball (extremely high temperature and pressure) that is created expands rapidly, trying to reach equilibrium with its surroundings (ambient temperature and atmospheric pressure). This

creates a shockwave that travels outward from the detonation source at supersonic velocities (Smith 2003, Smith and Renfroe 2005).

Explosive events have a very brief period of existence, typically measured in milliseconds. The blast pressure nearly instantaneously reaches a peak magnitude as the shockwave expands, then decreases rapidly with increasing distance from the explosion – as a function of the cube of the distance. Late in an explosive event (relatively speaking), the blast pressure becomes negative, creating suction (Lin, Hinman, Stone and Roberts 2004). A typical pressure vs. time graph for an explosive event is shown in Figure 2.3. When a shockwave interacts with its surroundings, such as the case when buildings are located near the source of an explosion, it behaves in a chaotic manner.

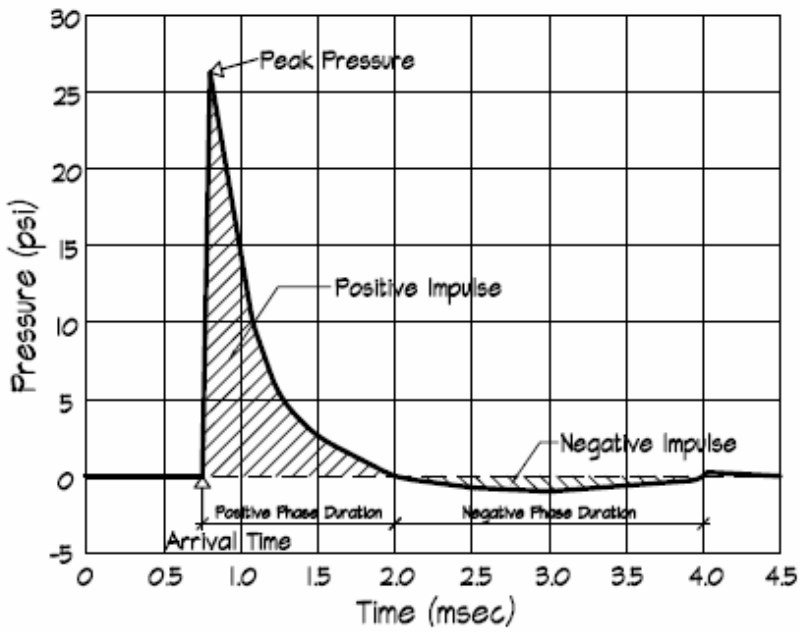

Figure 2.3. Pressure versus Time graph (Smith and Rose 2002).

For design purposes, the blast pressure vs. time graph is generally simplified and assumed to consist of a triangular shape. The rise in pressure above that of ambient pressure is assumed to occur instantaneously at its peak value and decay exponentially to zero overpressure (i.e., back to ambient pressure) in a time typically measured in milliseconds (msec). The negative phase of the blast is sometimes neglected for simplicity but

should be considered when evaluating lightweight and fast responding elements. For some methods of analysis, the blast load waveform is converted to a triangular shape in which the area under the pressure-time waveform, or impulse, is simply the area of the triangle, or (Smith 2003, Smith and Renfroe 2005):

$$I=P*t/2, \text{ where}$$

$$I = \text{Impulse (psi-msec)}$$

$$P = \text{Peak pressure (psi)}$$

$$t = \text{Duration time (msec)}$$

Both the pressure and the impulse (or duration time) are required to define a given blast loading. Alternatively, for an explosive threat defined by its charge weight in pounds of TNT-equivalent and its distance from the target (standoff), the peak pressure and impulse of the shockwave can be determined using charts available in military technical manuals.* These tables of pre-determined shock parameters may be used to estimate blast pressure and impulse (Lin, Hinman, Stone and Roberts 2004). Table 2.1 below shows some pressure-impulse values as a function of standoff distance. Government sponsored computer software programs, such as WinDAS, quickly convert standoff and charge weight to pressure-impulse couples.

Table 2.1. Airblast parameters for 50 lb. TNT detonation (Smith and Renfroe 2005).

50 lb. TNT	20 ft.	50 ft.	75 ft.	100 ft.	200 ft.	300 ft.
Peak positive pressure (psi)	122.8	12.6	6.3	4.1	1.6	0.9
Impulse (psi-msec)	136.5	47.5	30.6	22.5	10.9	7.1

Window response under blast pressures

Conventional windows are designed mainly to resist lateral wind loads, unlike other building components which are designed for gravity loads resulting from building contents, occupants, and self-weight. Framing mem-

* Kingery-Bulmash air blast equations are used in most Department of Defense technical manuals.

bers for a standard upright window unit, therefore, are fabricated from materials such as wood, vinyl, fiberglass, aluminum, or steel, each of which provides enough strength and stiffness to hold the glazing in place under the design lateral loading. Similarly, standard anchoring systems are used to attach the window frame to the supporting structure. The type and thickness of vertical glazing is specified to resist design wind loads, and glazing for skylights or sloped windows is selected to support expected snow loads as well as its own weight (Facy 2004, Norville and Conrath 2001).

Because conventional window framing members, glazing, and connectors are expected to resist only minimal loading, they tend to behave as the 'weak link' when subjected to blast loads. In general, the annealed glass utilized in the majority of conventional window units fails at much lower blast pressures when compared to building structural components such as walls, columns, or beams (Norville, Harvill, Conrath, Shariat, and Mallonee 1999). This is especially true when building structural systems are constructed of robust materials such as reinforced concrete.

Blast pressures exerted on a building exterior are likely to exceed the capacity of most conventionally constructed window systems, thus causing widespread window damage to unprotected buildings near the explosion (Crawford, Pelessone, Bogosian, and Ronca 2000). In the worst scenarios, many windows fracture, creating a situation in which the blast wave rushes into the building and glazing fragments are propelled at speeds in excess of 100 ft/s. Even relatively small explosions cause significant window glass breakage, requiring at minimum window glass replacement and significant clean up (Norville and Conrath 2001, Norville, Harvill, Conrath, Shariat, and Mallonee 1999).

Glass breakage injuries to building occupants

Glass facades represent the greatest risk of serious injury for building occupants attacked by means of a terrorist bomb (Crawford, Pelessone, Bogosian, and Ronca 2000). These attacks typically occur without warning, preventing people from seeking shelter. Consequently, these events often result in numerous injuries and occasionally deaths attributable to flying and falling glass shards (Norville, Harvill, Conrath, Shariat, and Mallonee 1999). In fact, about 75% of all building damage and bodily injuries from

bomb blasts have been attributed to window failure and the subsequent flying and falling glass (Smith and Renfroe 2005).

In the event of an explosion, there are three general categories of bodily effects that building occupants may experience: primary, secondary and tertiary. These effects, and their associated explosion-related injuries, are briefly outlined as follows. Glass breakage contributes significantly to all three of these injury groups (Smith and Renfroe 2005; Lin, Hinman, Stone and Roberts 2004; Norville, Harvill, Conrath, Shariat, and Mallonee 1999):

> *Primary effects* include the human body's response to detonations, in which the blast wave directly interacts with the occupants. The high pressures that enter through broken windows are often responsible for eardrum damage and lung collapse. These blast-related injuries occur when the shock front of the blast wave passes into buildings through openings vacated by fractured glazing.
>
> *Secondary effects* include direct debris impacts, in which heavy and/or high velocity fragments strike building occupants. As the air-blast damages building components in its path, airborne missiles are generated which cause impact injuries. Direct glass-related injuries occur when glass shards flying and falling from fractured windows penetrate and/or lacerate personnel located in or near the attacked building.
>
> *Tertiary effects* include loss of balance and subsequent impact of a person into his/her surroundings due to the passing blast wave or violent shaking of the structure. Air-blast overpressures instantaneously engulf building interiors once the windows shatter, causing occupants to be forcibly thrown against objects or to fall.

Secondary effects have been responsible for a significant portion of the injuries received in explosion incidents (Lin, Hinman, Stone and Roberts

2004). In addition to lacerations, abrasions, and contusions resulting from glass shards, many victims of the A.P. Murrah Federal Building bombing in Oklahoma City—both inside and outside buildings—suffered hearing-related primary injuries from exposure to the air blast pressure (Norville, Harvill, Conrath, Shariat, and Mallonee 1999).*

To cite another example, over 5,000 people were injured by flying glass and debris in the bombings of two American embassies in Africa in 1998. The types of injuries that occurred included deep lacerations, eye injuries, among others. Approximately 90 people were blinded in the attack on the U.S. embassy in Kenya (Smith and Renfroe 2005).

Glazing materials

The primary purpose of blast-resistant window systems is to protect personnel inside the building. To be fully effective, blast-resistant glazing must be completely interlocked in its framework and the frame must be securely anchored to primary structural members. The glazing must stay constrained in the frame after fracturing without allowing fragments to enter the occupied space (Figure 2.4). To provide more complete protection, even after fracturing, the glazing should maintain closure of the building envelope in order to protect against pressure-related injuries (i.e., primary and tertiary) and reduce cleanup costs (Norville and Conrath 2001).

* Of the 759 persons that sustained injuries, 319 were inside the target building and 440 were outside or in neighboring buildings. A survivor survey taken by the Oklahoma State Department of Health showed that 66% of respondents attributed their injuries to glass (Smith 2003).

Figure 2.4. Pre- and post-blast test views of laminated glazing. Note that fractured glazing remains in its frame (Graham Architectural Products website).

Glazing is generally categorized as *monolithic*, *laminated*, or *insulating*. Specialized security glazing configurations are also available, but they may not be suitable for blast protection.*

Monolithic

The majority of architectural window systems utilize monolithic glass—a single, flat piece of glass of constant thickness. There are different varieties of monolithic glass, each differentiated in terms of the manufacturing heating/cooling process or material composition. The most widely used in conventional windows is *annealed* glass, which is cooled slowly to transmit light with little distortion (NASF 2005, Vigener and Brown 2007). Basic annealed glass when fractured produces dagger-like shards. Depending on the severity of the blast load, the shards can be hazardous and potentially fatal to building occupants. Heat-treated glazing includes *heat-strengthened* glass and *fully-tempered* glass. These products generally have a higher resistance to fracturing than annealed glass of the same thickness, but the heat-treatment process can cause some visual distortion. Heat-strengthened glass generally has at least twice the fracture strength of annealed glass, but is still capable of producing large shards.

* Inappropriate security glazing products might include wire glass and acrylics. Glass-clad polycarbonate (bullet-resistant glass) or glazing assemblies that protect against flying debris and forced entry attack generally provide protection against airblast (WinDAS 2001). However, these protective glazing types are generally stiff and must be properly framed and anchored to adhere to provide overall protection. Buildings already equipped with such protective glass should be re-analyzed for blast-resistance capabilities.

Fully-tempered glass provides at least four times the fracture strength of annealed glass, and if broken, fractures into many smaller pieces (NASF 2005, Norville and Conrath 2001, Smith and Renfroe 2005, Vigener and Brown 2007). Regardless of type, monolithic glass alone does not provide satisfactory blast resistance.

Laminated

Sometimes referred to as 'safety glass,' laminated glass is used in a variety of applications because it is engineered to hold glass fragments together after breakage occurs. Initially used as the glazing material for automobile windshields, it has since been adapted to architectural and security use for buildings. Laminated glass is typically constructed of two or more layers of monolithic glass bonded with a tough, thin interlayer of polyvinyl butyral (PVB) or other polymer material. Once it fractures, most of the shards adhere to the PVB interlayer and are not thrown into the occupied space. Because of its post-breakage behavior characteristics, laminated glass can provide effective protection to a building interior in a blast. Laminated glazing assemblies may be fabricated using two layers of annealed or heat-treated glass. The interlayer material is available in differing thicknesses (Norville and Conrath 2001; Smith and Renfroe 2005) depending on performance requirements.

Insulating

Insulating glass was developed to improve the energy efficiency and performance of window systems. An insulating glass unit (IGU) consists of two separate panes sealed in a frame to provide dead air space between them, thereby dramatically reducing thermal gains and losses through the glazing. In some versions the space is filled with an inert gas to further reduce thermal conductivity. Blast-resistant insulating configurations developed in recent years utilize laminated glass at least on the interior (or inboard) pane so that shards from the exterior (or outboard) annealed pane are not thrown into occupied interior space (Norville and Conrath 2001; Smith and Renfroe 2005). Research has shown that this configuration provides more protection than if the outboard pane were not present as part of the assembly. An IGU fabricated with two separated panes of laminated glass results in an even more effective blast-resistant glazing assembly (Norville and Conrath 2001). The decision of whether to choose laminated glass or an insulated laminated assembly for blast protection is in-

fluenced by considerations of first costs, energy efficiency, and maintenance. One important consideration when specifying insulating assemblies is the service life of the thermal seals, which is typically 10 – 20 years depending on quality of materials and workmanship (Adhesives Age, March 2002). If the service life of the thermal seals on a candidate product is shorter than the intended life cycle of the entire blast window assembly, then an IGU may not be appropriate for the application.

Blast protection through balanced design

A blast wave strikes the glazing of a window system first, and all excess energy is quickly transferred to the ground through the building's foundation (Ward 2005). A simplified energy/load path schematic diagram is shown below in Figure 2.5.

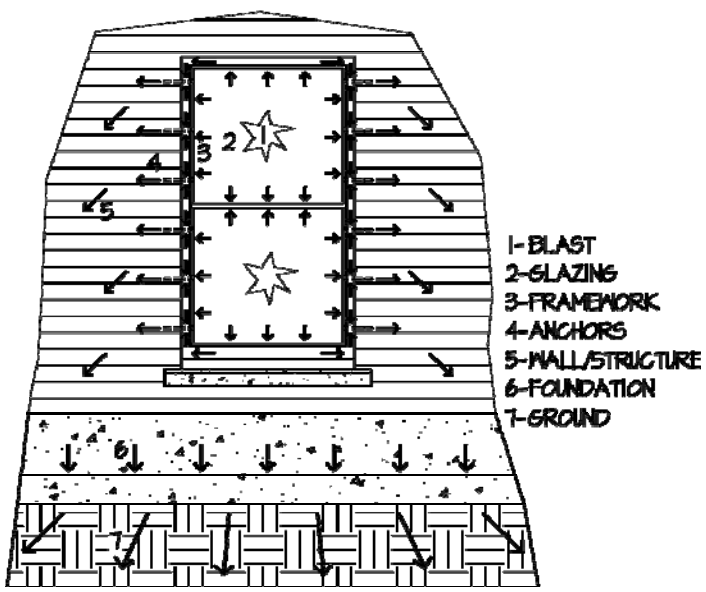

Figure 2.5. Diagram showing the energy/load path of a blast wave.

The protection provided by a blast-resistant window system is largely a function of an engineering principle termed *balanced design*. The objective of balanced design is to assure that window glazing fractures in a controlled manner before framing members or connectors fail (Hinman 2005). Laminated glass, for example, is often used as the glazing material for blast-resistant window systems because this material serves to dissipate much energy when its glass layers fracture. If properly selected, glass shards remain bonded to the polymer interlayer of the glazing to prevent them from exploding into occupied space as shrapnel. The interlayer ab-

sorbs much of the blast energy through tensile membrane action (synonymous with a balloon stretching), and then transfers excess energy to the framework. The metal frame, in turn, may deform, dissipating more blast energy before transferring excess energy to connectors and supporting structural elements.

A key point to understand, if somewhat counterintuitive, is that the glazing *must* partially fail in order to provide blast protection. If the glazing is too strong and rigid to fracture at all, then almost all of the shockwave energy will be directly transferred to the framework, anchors, and superstructure. Unless those members are specifically designed to handle significantly more loading than the glazing, then one or more of those items may catastrophically fail. If the glazing detaches as a single mass, or in any other way, it will be driven into the building with unstoppable destructive force (Smith and Renfroe 2005).

Upgrading existing windows for blast resistance

Window retrofit alternatives fall into the general categories of *fragment retention film*, *glazing replacement*, *framing system reinforcement*, *catch systems*, *secondary window systems*, and complete *replacement window systems*. Although this report focuses on replacement window systems, the other options are discussed briefly for reference. Table 2.2 compares the advantages and disadvantages of the various approaches both in term of UFC 4-010-01 compliance and the SOI Standards for Rehabilitation. Some retrofits may be inherently unsuitable for historic buildings because they would irreversibly alter architectural elements that contribute significance to the building (Lin, Hinman, Stone, and Roberts 2004).

Retrofit Method	Mandate Addressed	Advantages	Disadvantages
Fragment Retention Film	UFC 4-010-01	Prevents spread of glass shards and may be used in leased buildings.	Relatively short service life; Visual and performance deterioration over time; When detached from frame can create 'flying blanket' of glass; Does not comply with UFC for DoD owned buildings.
	SOI Standards	Initially transparent with minimal visual impact.	Mechanical attachment hardware may render window inoperable and/or alter historic window profile.
Glazing Replacement	UFC 4-010-01	New laminated glazing can be readily selected for a specific application.	Stiff panes transfer excessive loads to frames and supporting structural members; Likely to require reinforcement of other window components to obtain a balanced design.
	SOI Standards	Proper replacement techniques result in minimal visual impact.	Required reinforcement of window framework may alter historic window fabric and/or profile.
Framing system reinforcement	UFC 4-010-01	Wood frames may be reinforced with compliant steel or aluminum rods and/or plates.	Labor intensive and costly; Likely to require window glazing replacement to be UFC-compliant.
	SOI Standards	Retains historic profile if properly executed.	If poorly executed, can alter appearance of all components and supporting superstructure; Likely to destroy historic window fabric.
Catch System	UFC 4-010-01	Typically does not increase load transfer to existing framework.	Some require fragment retention film or glazing replacement to be fully effective; May be undermined by building occupants if operable; Inoperable catch systems render window inoperable; Likely to transfer excessive loads to structure at anchorage points.
	SOI Standards	No exterior visual impact assuming no mechanically attached components in the vision field.	Likely to have visual impact on interior of building.
Secondary Window System (interior and exterior)	UFC 4-010-01	Can be custom designed to meet UFC criteria.	Structural alterations may be necessary to affix system to adjacent walls, or floor and ceiling diaphragms using vertical framing members; Maintenance between historic and secondary windows may be cumbersome.
	SOI Standards	Historic window is left intact; Interior systems have no exterior visual impact; Typically less expensive than replacement units due to their basic profile.	Interior systems likely to have interior visual impact; exterior systems likely to have exterior visual impact; Most historic buildings do not have extremely deep window recesses to accommodate exterior systems.
Replacement Window System	UFC 4-010-01	Can be custom designed to meet UFC criteria.	Existing walls often lack characteristics for proper anchorage; Operable replacement units can allow blast pressure to enter building when open.
	SOI Standards	Can replicate or be otherwise compatible with historic profile.	Does not preserve historic fabric; Metal frames have thermal properties that differ from wood frames; May not preserve historic operability (e.g., casement replacing double-hung for anchorage reasons).

Table 2.2. Comparison of window retrofit applications for blast resistance.

Retrofit alternatives

Fragment retention film

This product is a thin, transparent sheet of tough material (polyethylene terepthalate) adhered to the interior surface of a window. It works by holding broken glass together in a blast. These films are categorized by method of installation — *daylighted*, *wet glazed*, and *mechanically attached*. Mechanically attached films use hardware that may impact the appearance and operability of historic windows. Fragment retention films have been widely used as an inexpensive 'quick fix' in projects where entire window unit replacement was not considered practical or affordable (Smith and Renfroe 2005). However, upkeep requirements and short design life make these films expensive in the long term.* The materials tend to yellow with age and scratch easily to obscure sightlines. Removal and reapplication of film may stress or damage historic windows. Fragment retention films do not comply with UFC 4-010-01 as a form of blast protection except in leased facilities.

Glazing replacement

This method involves simply replacing the existing window glass with blast-resistant glazing. Satisfactory performance can be ensured only if existing frame members, anchors, and supporting structural elements work with the new glazing as an integrated system. This option is only feasible for existing window frames that are strong enough and provide sufficient frame bite (or can be effectively reinforced and channeled to accept the replacement glazing) and allow for adequate anchorage to the structure (Lin, Hinman, Stone, and Roberts 2004). Typical historic window frames lack adequate strength, stiffness, and frame bite, and cannot be reinforced without irreversible effects on historic fabric. However, some historic window systems, such as those used in industrial facilities or ammunition plants, may be adaptable for glazing replacement.

Framing system reinforcement

Existing framing members that are inadequate for the desired level of blast-resistance may possibly be reinforced with aluminum or steel channels, bars, or other shapes. Because frame reinforcement involves expen-

* Fragment retention films typically have a ten-year warranty against visual defects.

sive, labor-intensive deconstruction, reinforcement, and reconstruction of individual window components, it is feasible only in rare cases.

Catch systems

A catch system is a barrier installed to impede broken glass from entering a building's occupied space. Specifically, these systems are used in cases where it is expected that a blast would detach window glass from its framing system, either as shards or as a 'flying blanket' of fragments held together by window film. Products currently available include *cable* systems, *fabric* systems, *louvers*, weighted blast *curtains*, blast *shades*, *bars*, and a variety of rigid or flexible screens (Crawford, Pelessone, Bogosian and Ronca 2000; Lin, Hinman, Stone and Roberts 2004). Note that some catch devices are only beneficial if used in conjunction with blast-resistant glazing or fragment retention film. Furthermore, the protection offered by some types of blast curtains and shades can be defeated if building occupants draw them aside (Lin, Hinman, Stone and Roberts 2004).

Secondary window systems

A secondary blast window may be positioned inside the existing window system to create a protective barrier between the exterior and interior space. This secondary blast-mitigating unit is engineered to prevent blast-driven glass fragments from the existing window from entering occupied space (Lin, Hinman, Stone, and Roberts 2004). This type of system can work well with historic windows because it does not require modification of existing historic frames or glazing. Because secondary blast windows are usually mounted inside the building envelope, there is no visual indication from outside that the windows have been modified. Visual impacts to the building interior depend on the method of installation and interior wall finish. In cases where the existing wall does not provide for adequate anchorage, secondary window systems may be anchored to floor and ceiling diaphragms of sufficient strength with properly designed connecting members.

Alternatively, a secondary blast window system can be installed on the exterior. This approach is of limited use for historic properties, however, because exterior installation obscures the view of the existing historic window, and the interior glazing needs to be deeply recessed to provide sufficient deflection clearance for the blast-resistant exterior glazing.

Replacement window systems

In the vast majority of installed applications, a blast-resistant replacement window functions as an ordinary window and is never subjected to blast loading. Since blast mitigation is not the sole function of any window, a blast-resistant window system must perform most or all of the functions of a conventional window system under service loads typical for the application and region. It is also desirable that these specially engineered systems perform their everyday functions without special maintenance requirements beyond those for conventional windows (Norville and Conrath 2001). Blast-resistant replacement windows must perform well in everyday service because, like conventional windows, they represent a major long-term capital investment. While first costs can be very high in large-scale window replacement projects, well-designed blast-resistant windows can have the same service life as conventional windows (i.e., 30 – 40 years) (Piper 2004).

New replacement window systems can be designed with blast-resistant glazing in steel or aluminum frames to provide appropriate levels of protection to building occupants. Also, they can be manufactured in the style of historic window profiles for use in historic buildings. However, of the currently available product lines, only a small fraction are offered in styles appropriate for historic building projects (Lin, Hinman, Stone, and Roberts 2004).

Blast-resistant replacement windows are available in two fundamentally different varieties: *rigid frame systems* and *flexible frame systems*. Rigid systems are different from flexible systems, which are designed to flex and deform under blast loading. This difference in performance characteristics has very different implications for detailing and anchorage requirements, and these are often important considerations in historic buildings (Smith and Renfroe 2005). Chapter 4 presents a detailed discussion of these design issues. A third system type, termed the *Muntin Array System*, has recently been developed by the State Department and is capable of providing the required level of protection at very high blast loading.

Rigid frame systems

Most blast-mitigating window systems are based on a rigid frame. These systems typically feature laminated glass mounted in stiff steel or aluminum frames. They are designed to hold the glazing within the framework,

and transfer substantial blast load through the anchors and into the surrounding wall or supporting structural members. Therefore, anchorage and attachment of a rigid frame replacement window system are extremely important design considerations (Lin, Hinman, Stone and Roberts 2004). If the window system is not adequately anchored into a supporting wall or structural elements of sufficient strength, the rigid frame may become partially or totally dislodged in a blast.

Flexible frame systems

Flexible frame systems generally can withstand higher blast loads than rigid frame systems. These systems employ energy-absorbing devices concealed inside aluminum primary framing elements. A flexible system is designed for controlled collapse as blast energy is dissipated through the combined action of the integrated energy-absorbing devices and deformation of the metal frame materials. These systems can greatly reduce anchorage requirements in comparison with those for rigid frame systems. This characteristic makes flexible systems feasible for historic buildings that may not have the existing structural capacity to support a rigid frame system (Lin, Hinman, Stone and Roberts 2004).

Muntin arrays

These systems are constructed by backing a single pane of laminated glass with a grid of highly ductile steel tubes that appear to divide the glazing into small, individual lights like conventional muntins. The independent steel grid is not attached to the glazing, though it must be securely anchored to adjacent structural members for the system to function as designed. If the laminated glazing pane detaches from the primary framework in a blast, the muntin array functions as a catcher system to prevent it from being propelled into the occupied space (Lin, Hinman, Stone, and Roberts 2004; Sunshine, Amini, and Swanson 2004). These systems are ideally suited to large expanses of fenestration for which window systems can not be feasibly designed to withstand the blast pressures accumulating over the large glazing area. For historic buildings, nonfunctional muntins may be fabricated in a desired profile and attached to the outboard side of the muntin array to replicate the historical exterior appearance.

Market availability of blast-resistant window systems

Until recently, blast-resistant windows were used only in structures that housed explosive materials or in facilities that were highly probable targets of a terrorist attack. Munitions plants, military command structures, and hazardous materials warehouses are examples of buildings for which protective windows were purpose-designed to resist a specific blast threat or hazard. In general, these applications were designed to resist extremely large blast loads (Smith 2003), and the demand for such window systems was quite low when compared with the overall market for windows. Consequently, blast-resistant windows were sold only by a few specialty manufacturers. They were designed exclusively for performance and utility, with no significant consideration of aesthetic detail. Like the at-risk buildings for which they were manufactured, the design of these specialized windows was optimized for the mitigation of blast effects. There were few options available in terms of size and style because the market for these products was not large or diverse enough to warrant it. Due to the limitations in demand, manufacturers invested little in research and development for alternative configurations, architectural appearance, anchoring systems, or advanced technologies (Hays 2003).

The risk environment after 2001 has spurred a robust new demand for protective facility design, with many different building types now requiring some elevated level of protection against explosive attacks. This demand has made it profitable for manufacturers to offer a wide variety of new blast-resistant window products (Hays 2004). Despite this boom in the market, available commercial off-the-shelf (COTS) blast-resistant window systems are rarely acceptable for window replacement projects. Their development targets new construction and rarely accommodates the sizes, shapes, and profiles needed to replace vintage windows.

Furthermore, no consensus set of criteria has yet emerged to facilitate the design and validation of blast-resistant window systems. The major U.S. government buyers of protective design — the Department of Defense (DoD), the General Services Administration (GSA), and the U.S. State Department — each maintain a different set of standards for blast-resistant window design.

Historic preservation issues

Before 1900, most window frames in U.S. buildings were wood. Around 1900, U.S. window manufacturers adopted the British *Bessemer process*, which lowered steel production costs and made hot rolled steel windows as affordable as wood windows. In addition, they were strong enough to span larger window openings than wood window systems. These characteristics supported North American Art Deco (1920s), Art Moderne (1930s), and International Style (1920s – 1940s) architecture, which all typically featured large windows. Following World War II (WWII), demand exploded for extruded aluminum-framed windows in the postwar housing boom. The anodizing process used in manufacture made these windows thin, light, rigid, durable, and easy to handle (Vigener 2005; Clement 1997; Park 1984). Vinyl-framed window systems emerged after WWII in Germany, where there was a shortage of conventional construction materials. These frames had a bulky appearance that German consumers wanted but that was not popular in the United States. Vinyl windows were later introduced into the U.S. market, eventually gaining popularity in the 1970s and 1980s (Architectural Record 2000). (Other materials also have been used to a lesser extent, but for purposes of brevity they are not discussed here.)

Any historic window system is likely to require major modification, barrier protection, or full replacement to comply with the UFC minimum standards. Most historic wood and vinyl frames are not strong enough to comply with the UFC standards. Historic steel and aluminum frames may satisfy UFC material standards but they were typically not fabricated with enough frame bite needed to restrain protective glazing under blast loads. If their frame bite cannot be modified to meet UFC specifications, it will be necessary to replace the historic metal windows with units with compliant frame bite. In cases where historic window frames *do* meet UFC frame bite specifications, the existing annealed glass must be replaced with laminated glazing. This approach may require that small, individual panes of glass be replaced with a single sheet of protective glazing.* The reduction in rigidity afforded by the larger, single sheet of glazing puts fewer requirements on connections which in turn puts less demand on the supporting structure. In historic buildings whose structural supports are not strong enough to

* Replacement windows may feature true divided lites, but their structural muntins may be larger than those in the historic profile.

resist forces transferred to it from the window system, structure reinforcement is necessary.

Although it may be possible to retrofit certain historic windows for blast resistance, in many cases the shortest route to UFC 4-010-01 compliance will be full replacement with a custom-designed blast-resistant window product. However, window replacement projects often involve the removal or substantial alteration of components that contribute to a building's historical significance, which conflicts with mandated historic preservation practices.

National Register eligibility and the SOI standards

A building listed on or eligible for listing on the National Register of Historic Places (NRHP) is subject to special treatment standards codified in 36 CFR 67 and referred to as the *Secretary of the Interior's Standards for Rehabilitation* (or *SOI Standards*). The SOI Standards define *rehabilitation* as "the process of returning a property to a state of utility, through repair or alteration, which makes possible an efficient contemporary use while preserving those portions and features of the property which are significant to its historic, architectural, and cultural values." The SOI Standards have been widely used to guide agencies in fulfilling their historic preservation responsibilities for properties in Federal ownership or control. The intent of the SOI Standards is to support the long-term preservation of a property's significance through the preservation of historic materials and features. The SOI Standards pertain to historic buildings of all materials, construction types, sizes, and occupancy. They encompass the building exterior and interior as well as attached, adjacent, or related new construction, including windows. The SOI Standards are to be applied to specific rehabilitation projects with due consideration of economic and technical feasibility.

Rehabilitation inherently involves at least some repair or alteration of the historic building to provide for an efficient contemporary use, but the modifications must not damage or destroy materials, features, or finishes that are important in defining the building's historic character. Because windows typically contribute to a building's historic significance, window replacement projects of any kind will almost always negatively impact historic integrity. These negative impacts include incompatible window profiles, inappropriate material choices, changes in operability that affect appearance and use, and window unit installation or performance problems

that damage the historic building envelope. In a blast window replacement project, the primary preservation objective is to minimize the negative impacts of removing or modifying historical materials and features.

SOI standards for new additions and alterations

Not all the SOI Standards apply directly to window replacement. The main standards of interest in a window replacement project are SOI Rehabilitation Standards 9 and 10, both of which address building additions or alterations.

SOI rehabilitation standard 9

> New additions, exterior alterations, or related new construction will not destroy historic materials, features, and special relationships that characterize the property. The new work will be differentiated from the old and will be compatible with the historic materials, features, size, scale and proportion, and massing to protect the integrity of the property and its environment.

Standard 9 applies to new additions (the replacement windows) and exterior alterations (related changes to the building envelope). The challenge is to both differentiate and integrate the new and the old. When metal blast windows are selected to replace wood-framed windows, the differentiation is provided by the difference in materials. When new metal windows are selected to replace old metal windows, the frame members and glazing will typically differentiate the new from the old. When double-hung units are replaced with casements due to framing requirements, the change in functionality will set them apart.

Integrating the new with the old is usually the more difficult requirement in historic architecture. While the overall size, scale, and proportion of new windows must match the old to fit the historic fenestration, successfully integrating the new units with the historic materials, features, and massing is more difficult.

Wood and vinyl historic window frames must be replaced with steel or aluminum units to comply with the UFC. The replacement materials will be obvious at close range, but less so at a distance. The application of faux

paint finishes to replacement window frames can emulate the appearance of historic materials and characteristics such as stone, bronze, wood grain, or metallic patinas. Glazing replacement is less likely to affect window aesthetics, but tints and coatings are available to alter the visual qualities of replacement laminated glazing if necessary. Tints and coatings can enhance visual and thermal comfort by controlling glare, managing daylight, and minimizing thermal gains and losses. Carefully selected glazing tints and coatings can serve historic preservation purposes in instances where maintaining a specific reflective quality is desirable.

In order to comply with the SOI Rehabilitation Standards, the visual elements of a blast-resistant replacement window unit must be visually compatible with the style, configuration, pattern of lights, colors, and decorative features of the historic unit. Nonfunctional decorative muntins may be attached to give blast-resistant windows an appropriate historic style and light pattern. Authentic historic multi-pane configurations will almost always have to be replaced with a single pane of laminated glazing, and the reflective qualities of the glass may be important in preserving a building's historic appearance.

The massing and profile of replacement sashes and muntins must also match those of the historic units they replace. Similar profiles will produce comparable shadow lines on the building façade and preserve that aspect of the historic building's distinctive exterior aesthetics. On the contrary, blast-resistant replacements with bulky frames may not comply with the SOI Rehabilitation Standards.

The design and compatibility issues outlined above are discussed in the context of exterior appearance, but they also apply indoors if the building interior spaces are historically significant. Therefore, interior aesthetic compatibility is often an issue when selecting blast-resistant replacement windows (Lin, Hinman, Stone and Roberts 2004). Replacement windows must be visually compatible with the design and finish of historically significant interiors. Incompatible window profiles, awkward framing, inappropriate millwork, and changes in operability that affect appearance can negatively impact historic interiors. A major potential issue related to interiors can arise when a replacement window system requires supplemental interior structural supports and connections to ensure proper performance in a blast. Major modifications of this nature may be concealed by using historically compatible millwork, detailing, and finishes.

The successful procurement of blast-resistant windows for a historical property depends on finding manufacturers capable of fabricating blast-rated windows with historically compatible profiles and details. Appendix B lists compliant blast window manufacturers known at the time of publication.

SOI rehabilitation standard 10

> New additions and adjacent or related new construction will be undertaken in such a manner that, if removed in the future, the essential form and integrity of the historic property and its environment would be unimpaired.

Because the expected life of windows is shorter than the service life of a well constructed permanent building, architects generally design fenestration so windows can be removed and replaced when necessary. Therefore, the installation of replacement blast windows may usually be considered to be a reversible addition in terms of SOI Rehabilitation Standard 10. However, because the effectiveness of blast windows may depend on some degree of structural strengthening to provide suitable anchorage, historic building materials and details at or adjacent to the rough opening may be damaged or irreversibly modified during a replacement project. If changes to cladding, trim, or other architectural features are necessary to ensure proper window structural performance under blast loading, those alterations should be carried out as specified in SOI Standard 6, which is intended to sustain a building's historic character through the application of appropriate and compatible design principles, colors, textures, and materials.

The full text of all the SOI rehabilitation standards is presented in Appendix A.

Dual compliance with antiterrorism and historic preservation mandates

There is an inherent tension between UFC 4-010-01 and the SOI Rehabilitation Standards. UFC Section 1-9 discusses the relation between the DoD minimum AT standards and the National Historic Preservation Act (by which the SOI Standards are authorized). Specifically, Section 1-9 clearly states that UFC 4-010-01 does not supersede DoD's obligation to comply with federal historic preservation laws (para 1-9.2). It also states that his-

toric preservation compliance must not prevent or delay the implementation of the UFC provisions for historic buildings (para 1-9.3).

Dual compliance with UFC and historic preservation requirements can be facilitated through the collaboration of protective design and cultural resources personnel with the assistance of installation planners, facility managers, construction supervisors, and work crews. The goal of everyone on a blast window replacement project team should be to identify the most appropriate solution that will comply with UFC 4-010-01 while applying methods and mitigation procedures that will conform to the SOI Rehabilitation Standards. Conflicting requirements must not be allowed to delay AT rehabilitation projects; sound technical judgments must be applied in a collaborative process to resolve any conflicts rapidly and effectively.

3 Pre-Design Considerations for Dual Compliance

For DoD inhabited buildings listed on or eligible for listing on the *National Register of Historic Places*, window system upgrades are subject to criteria set forth in UFC 4-010-01, *DoD Minimum Antiterrorism Standards for Buildings*, and standards codified in 36 CFR 67, *Secretary of the Interior's Standards for Rehabilitation*. This chapter presents an overview of the pre-design process with focus on baseline loading parameters and personnel protection requirements for a given building type and occupancy level. It also covers historic preservation pre-design considerations, such as detailed building integrity assessments.

Pre-design considerations for UFC 4-010-01 compliance

To design a blast-resistant window system compliant with UFC 4-010-01, it is first necessary to establish the assumed baseline threats to serve as the foundation for the design process. Threats must be defined in terms of design explosive charge weight and the shortest distance from the weapon to the face of the window (i.e., the standoff distance). These variables are imperative for calculating the design blast parameters — peak positive pressure and impulse — that a given window is designed to resist.

Blast-resistant window systems for military buildings are to be designed to one of four levels of protection established in UFC 4-010-01: very low, low, medium, and high. Levels of protection describe the degree to which buildings can be damaged in the event of the design blast loading. Since UFC 4-010-01 prescribes only minimum levels of protection (i.e., very low or low) for buildings covered by the UFC, medium and high levels of protection are outside the scope of the UFC and this study. Justification in the form of a threat analysis is needed to assume higher baseline threats or higher baseline levels of protection than those specified by the UFC. Once a baseline threat has been established and a building's levels of protection has been designated, personnel can begin the process of designing replacement window systems capable of adhering to UFC 4-010-01 criteria.

Determining the baseline threat

As noted previously, the baseline threat for blast-resistant window design is some type of explosive detonated at a given standoff distance from a building. UFC 4-010-01 window provisions address two types of explosive threats: *vehicle bombs* (explosive devices located in a stationary vehicle) and *placed bombs* (hand-carried explosive devices). Moving vehicle bombs are not addressed by UFC 4-010-01. Each bomb type above has distinct implications with respect to explosive weights that are discussed in "Design explosive charge weight," page 30.

Since the location, size, and nature of terrorist threats are unpredictable, UFC 4-010-01 standards are "based on a specific range of assumed threats that provides a reasonable minimum baseline for the design of all inhabited DoD buildings." Furthermore, the terrorist threats addressed in the UFC are assumed to be directed against DoD personnel*. Blast-resistant windows must be designed to prevent the hazards associated with normal windows subjected to blast loading.

Standoff concepts

The primary design strategy prescribed by UFC 4-010-01 is to provide as much separation as possible between a target and a potential terrorist. Where sufficient land resources are available, the simplest and least costly way to reach the desired level of blast protection is to incorporate sufficient standoff into project designs. The UFC defines s*tandoff distance* as "a distance maintained between a building or portion thereof and the potential location for an explosive detonation." The definition is subdivided into categories for conventional construction standoff distance and minimum standoff distance.

Conventional construction standoff is the distance "at which conventional construction may be used for buildings without a specific analysis of blast effects, except as otherwise required" by the UFC. *Conventional construction* is construction not specifically designed to resist weapons or explosives effects. Conventional construction standoff distances may be overly conservative for some types of heavy construction such as reinforced con-

* Further discussion of baseline threat assumptions and rational are provided in UFC 4-010-01, Section 2.4-1.

crete or reinforced masonry. For that reason, the UFC allows for smaller standoff distances based on the results of a structural analysis of blast effects that uses the applicable charge weight.

Minimum standoff distance is defined as a distance less than the conventional construction standoff distance and specifically "the smallest permissible standoff distance for new construction regardless of any analysis or hardening of the building."

Because the purpose of UFC 4-010-01 is to minimize the likelihood of mass casualties, separate standoff requirements are provided for four military building categories based on their typical levels of occupancy and frequency of use: billeting, high occupancy family housing, primary gathering, and inhabited. Specific definitions for each category are summarized in Table 3.1.

Table 3.1. Summary of DoD building categories.

Building Category	Category Definition
Billeting	Any building or portion of a building, regardless of population density, in which 11 or more unaccompanied DoD personnel are routinely housed.
High Occupancy Family Housing	Family housing with 13 or more units per building.
Primary Gathering Buildings	Buildings that are routinely occupied by 50 or more DoD personnel. This designation applies to the entire portion of a building that meets the population density requirements for an inhabited building.
Inhabited Buildings	Buildings or portions of buildings routinely occupied by 11 or more DoD personnel and with a population density of greater than one person per 40 gross square meters (430 gross square feet).

Required standoff distances for new and existing buildings are presented in the UFC in both tabular form (UFC 4-010-01, Table B-1) and in a series of figures (UFC 4-010-01, Figures B-1 through B-4). The table summarizes the required standoff distances for locating new buildings and for establishing standoff compliance or noncompliance of existing buildings. Table entries under *Location* represent the standoff distance measurement start point, while the building façade represents the end point.

For vehicle bombs, threat size and subsequent standoff distance requirements are heavily influenced by the presence or absence of a *controlled perimeter*. A controlled perimeter is a physical boundary at which vehicle

access is controlled at the perimeter of a military installation or an area within an installation, or another area with restricted access. Access control measures at controlled perimeters are assumed to provide a layer of security that allows for the trade-off of reduced standoff. The trade-off assumption is that a larger bomb will be stopped at the controlled perimeter, with only the potential for smaller bombs to get on the installation.

For placed bombs, it is assumed that aggressors will not place devices in areas where their activities or the device itself can easily be detected by casual observers. Allowing for that logic, trash containers are considered to be a desirable location for planting a small explosive parcel, so they have their own standoff requirements.

UFC 4-010-01 Sections B-1.1.2.2.1, *Controlled Parking Areas*, and B-1.1.2.2.2, *Parking on Existing Roadways*, provide operational AT alternatives for parking and roadways in settings where existing buildings lack the minimum standoff distance. This situation is encountered where there is not enough adjacent real estate for sufficient standoff or a controlled perimeter, or where the property is located too close to a controlled perimeter or an existing roadway that cannot feasibly be rerouted.

It should be recognized that portions of existing buildings may have different standoff requirements from one another. UFC 4-010-01 allows low occupancy portions of a building to act as standoff so long as those portions do not have sufficient population densities to qualify them as inhabited. Hence, building areas categorized as inhabited or high-occupancy may be repurposed as uninhabited space, such as storage, to provide additional standoff distance. However, inhabited and high-occupancy building portions remain subject to full UFC-mandated standoff distances measured from the building façade. For additional information, see *inhabited building* definition in UFC 4-010-01, page A-3.

In cases where sufficient standoff is not available and site planning solutions for existing properties are not feasible, smaller standoff distances are allowed by the UFC if the required level of protection can be achieved through building hardening or other mitigating construction or building rehabilitation. This alternative must be verified through a valid blast analysis. This means that, where specified standoff distances are not available, blast-resisting replacement windows must provide the required level of protection by compensating for a building's closer proximity to a poten-

tial bomb blast. This compensation must be achieved by design through the strengthening of glazing, frames, and anchoring elements, and the design must be validated through analysis or testing.

Design explosive charge weight

The design explosive weight, as shown in UFC Table B-1, is the assumed baseline threat. Those explosive weights apply to all four occupied building categories addressed in UFC 4-010-01.

Without a controlled perimeter (or in cases where the distance between a controlled perimeter and the subject building is inadequate) explosive weight I is assumed since vehicles will not have been subjected to search for larger vehicle bombs. Explosive weight II is assumed when a controlled perimeter is present, the lesser charge here representing a tradeoff for keeping larger bombs at bay with vehicle searches. Explosive weight II is also associated with relatively smaller vehicle bombs and hand-carried bombs assumed to be placed in trash containers.

Level of protection

UFC 4-010-01 defines level of protection as "the degree to which an asset (person, equipment, object, etc.) is protected against injury or damage from an attack." In general, when determining the level of protection for a particular building, the principal considerations are the nature of the baseline threat, the risk of that threat occurring, the purpose of the building, and the nature of building occupancy. For purposes of UFC 4-010-01 compliance, the applicable minimum level of protection is determined by building category alone. UFC Section 2-4.4, *Levels of Protection*, describes the rationale behind the various protection levels. The levels are described qualitatively in UFC Table 2-1* reproduced below as Table 3.2.

* Table 3.2 (UFC Table 2-1) also describes the potential glazing hazards to occupants in the design blast. Note that glazing hazard levels are from ASTM F 1642, *Standard Test Method for Glazing and Glazing Systems Subject to Airblast Loading* (see *DoD performance-based testing standard using ASTM F1642*, page 59).

Table 3.2. Levels of protection for new and existing buildings (UFC 4-010-01, Table 2-1).

Level of Protection	Potential Building Damage / Performance [2]	Potential Door and Glazing Hazards[3]	Potential Injury
Below AT standards[1]	Severe damage. Progressive collapse likely. Space in and around damaged area will be unusable.	Doors and windows will fail catastrophically and result in lethal hazards. (High hazard rating)	Majority of personnel in collapse region suffer fatalities. Potential fatalities in areas outside of collapsed area likely.
Very Low	Heavy damage - Onset of structural collapse, but progressive collapse is unlikely. Space in and around damaged area will be unusable.	Glazing will fracture, come out of the frame, and is likely to be propelled into the building, with the potential to cause serious injuries. (Low hazard rating) Doors may be propelled into rooms, presenting serious hazards.	Majority of personnel in damaged area suffer serious injuries with a potential for fatalities. Personnel in areas outside damaged area will experience minor to moderate injuries.
Low	Moderate damage – Building damage will not be economically repairable. Progressive collapse will not occur. Space in and around damaged area will be unusable.	Glazing will fracture, potentially come out of the frame, but at a reduced velocity, does not present a significant injury hazard. (Very low hazard rating) Doors may fail, but they will rebound out of their frames, presenting minimal hazards.	Majority of personnel in damaged area suffer minor to moderate injuries with the potential for a few serious injuries, but fatalities are unlikely.. Personnel in areas outside damaged areas will potentially experience a minor to moderate injuries.
Medium	Minor damage – Building damage will be economically repairable. Space in and around damaged area can be used and will be fully functional after cleanup and repairs.	Glazing will fracture, remain in the frame and results in a minimal hazard consisting of glass dust and slivers. (Minimal hazard rating) Doors will stay in frames, but will not be reusable.	Personnel in damaged area potentially suffer minor to moderate injuries, , but fatalities are unlikely. Personnel in areas outside damaged areas will potentially experience superficial injuries.
High	Minimal damage. No permanent deformations. The facility will be immediately operable.	Glazing will not break. (No hazard rating) Doors will be reusable.	Only superficial injuries are likely.

Notes:
1. This is not a level of protection, and should never be a design goal. It only defines a realm of more severe structural response, and may provide useful information in some cases.
2. For damage / performance descriptions for primary, secondary, and non-structural members, refer to UFC 4-020-02, DoD Security Engineering Facilities Design Manual.
3. Glazing hazard levels are from ASTM F 1642.

UFC 4-010-01 requires that inhabited buildings provide a *very low* level of protection to their occupants, and blast windows for those buildings must meet or exceed the ASTM F1642 low hazard rating. The UFC requires that primary gathering buildings, billeting, and high occupancy family housing afford a *low* level of protection, and protective windows for those buildings must meet or exceed the ASTM F1642 very low hazard rating. Table 3.3 summarizes the relationship between levels of protection, ASTM F1642 glazing hazard ratings, and building utilization categories. The inverse ratings are attributed to the reduction of hazards as protection is increased.

Table 3.3. Relationship between DoD levels of protection and ASTM glazing hazard ratings.

Building Category	Required Level of Protection (UFC 4-010-01)	Required Glazing Hazard Rating (ASTM F1642)
Inhabited Buildings	Very Low	Low
Primary Gathering Buildings	Low	Very Low
Billeting	Low	Very Low
High Occupancy Housing	Low	Very Low

Pre-design considerations for historic preservation compliance

For buildings that have been determined eligible for listing on the *National Register of Historic Places*, blast window projects must comply with the SOI rehabilitation standards. Prior to window replacement, a detailed assessment of the eligible building is necessary to identify the interior and exterior elements that contribute to the property's historic significance. Window form, size, scale, detailing, materials, and finishes are typically important in defining a building's historic character. For that reason, window-related contributing elements will strongly influence the selection of a blast-resistant replacement system. Historical, pictorial, and physical evidence of the historical window should be used to accurately reproduce its essential form and detailing in the replacement blast window. While use of the original material is desirable, a compatible substitute material may be used. Appendix B lists manufacturers of blast windows that may satisfy both the DoD minimum AT standards and the applicable SOI rehabilitation standards.

4 Designing Historically Compatible Blast Windows that Comply with UFC 4-010-01

All window replacement projects can be highly disruptive to normal building operations and therefore must be planned and executed carefully (Piper 2004). Moreover, the procurement of replacement window systems is more challenging than specifying windows for new construction because retrofits are constrained by the existing building's fenestration dimensions and supporting structure (Facy 2004). Window system replacement projects also must consider the existing window system configuration as well as serviceability and functionality requirements. Variations will be encountered from project to project, building to building, and even window to window. Designing replacement window systems to meet both UFC and historic preservation criteria can enormously complicate the project.

UFC 4-010-01 Standard 10, *Windows and Skylights*, addresses blast-resistant design for the glazing, framing, connections, and supporting structural elements for all new and existing inhabited buildings covered by the UFC. The provisions of UFC Standard 10 only address the minimum standards (very low and low levels of protection), and apply even if the conventional construction standoff distances are met or exceeded. Table 4.1 provides a breakdown of the individual stipulations within UFC 4-010-01 Standard 10.

Table 4.1. Summary of UFC B-3.1 (Standard 10) provisions.

Section	Title	Design Approach	Summary
B-3.1.1	Windows and Skylights with Laminated Glass Glazing	Prescriptive	Windows fabricated with laminated glass glazing can be designed in accordance with the prescriptive requirements of B-3.1.1.1 – B-3.1.1.4 (Glazing, Frames, Glazing Frame Bite, and Connection Design), see Table 4.2.
B-3.1.2	Supporting Structural Elements	--	Surrounding wall elements and their connections to the rest of the structure may be designed using their nominal strengths. The assumed design load will be 8 times the glazing resistance determined using ASTM E1300 and F2248.
B-3.1.3	Alternate Glazings	--	When glazing other than laminated glass is used, designs must still afford buildings the applicable level of protection.
B-3.1.4	Alternate Method of	Performance-	Window components may be designed using

Section	Title	Design Approach	Summary
	Analysis	Based	dynamic analysis to prove the system will provide the appropriate level of protection. Simplified dynamic analyses may be done by hand, but most will employ computers for output.
B-3.1.5	Testing	Performance-Based	Window systems may be dynamically tested in accordance with ASTM F1642 to verify the system affords the appropriate level of protection. Testing must include the entire window or system (including connectors).
B-3.1.6	Window and Skylight Replacement Projects	--	All wholesale planned glazing and window replacement projects, regardless of cost triggers, must meet the requirements of UFC 4-010-01 Standard 10.
B-3.1.7	Alternative Window Treatments	--	Fragment retention film or blast curtains are not acceptable alternatives for non-leased existing inhabited buildings required to comply with UFC 4-010-01 criteria.

According to UFC 4-010-01, the design of blast-resistant glazed building features may either be prescriptive or performance-based. A *prescriptive* approach involves designing system components to fixed requirements as stipulated by UFC Standard 10 (Windows and Skylights), B-3.1.1 (B-3.1.1.1 – B-3.1.1.4). Table 4.2 lists a summary of the prescriptive requirements for glazing, frames, glazing frame bite, and connection design.

Table 4.2. Summary of UFC B-3.1.1, Prescriptive Requirements.

Sub-section	Title	Summary
B-3.1.1.1	Glazing	The required nominal thickness of laminated glass and PVB interlayer is determined with UFC Tables B-2 & B-3 or by utilizing ASTM F2248 & ASTM E1300. Minimum requirements: ¼ in. nominal laminated glass (two nominal 1/8 in. annealed glass panes bonded with 0.030-in. PVB interlayer).
B-3.1.1.2	Frames	Window frame components are to be constructed of aluminum or steel, and should be designed such that each supporting edge resists deflections of L/160 in accordance with ASTM F2248 (L=length).
B-3.1.1.3	Glazing Frame Bite	Frame bite requirements are set forth in ASTM F2248. For structurally glazed applications, the structural silicone bead must be applied to both sides of the glass panel for single pane glazing but only to the inboard side for IGUs.
B-3.1.1.4	Connection Design	Connections must be capable of preventing the frame from being dislodged from supporting structural elements. Design connections using loads determined using ASTM F2248 and the allowable strengths of fasteners. Performance-based dynamic testing may be used as an alternative.

A *performance-based* approach requires that either: (1) a hand-calculated or computer-based analysis is performed on the entire glazing system or individual components as described in UFC B-3.1.4, *Alternate Method of Analysis*, or (2) that live blast tests are conducted in a controlled explosive environment on glazing specimens that are representative of the systems to be installed in practice as described in UFC B-3.1.5, *Testing*. Although the UFC provides fixed requirements for individual window system components, many blast-resistant windows for historic applications will require either supplemental computational analysis or live blast testing to factor in existing conditions.

This chapter is dedicated to the design and selection of window system components and their impacts on historic building integrity. Specifications for a prescriptive design approach set forth in UFC B-3.1.1 (B-3.1.1.1 – B-3.1.1.4) are the baseline design parameters for these components. For window replacement projects on historic buildings, the design process must also consider the competing demands of dual UFC/historic preservation compliance. Due consideration is given to the SOI rehabilitation standards during component discussions.

Window component criteria

Glazing material selection

In protective glazing design, glass failure is quantified not in terms of whether breakage occurs, but whether it creates hazards for the occupants. Most blast-resistant protective glazing is either single-pane laminated glass or laminated glass with an added insulating pane. Every window replacement project has a unique set of design constraints and requirements, and selection of the most appropriate glazing material must take that into consideration. The decision process involves both protective considerations as well as first cost, daylighting, energy efficiency, and other building services. Other considerations include the location and size of window openings as well as the type and density of occupancy. Given the wide range of potential constraints and requirements, different protective glazing materials may have to be selected for different parts of a single building (Smith and Renfroe 2005).

The preferred glazing material for blast-resistance is laminated glass with structural-grade sealant around the perimeter of the frame. The sealant helps to hold the glazing in the frame under blast loading so the pane does

not dislodge. For insulated units, the inboard (indoor) pane is laminated to provide blast protection, but the outer pane need not be laminated (Hinman 2005).

The effectiveness of laminated glass assemblies as part of an integrated blast window system depends on several factors. The list provided in Table 4.3 is not exhaustive, but it illustrates some complexities inherent in integrated glazing design. Ultimately, glazing should be selected according to the principles of *balanced design*.

Table 4.3. Factors associated with the design of laminated glass assemblies.

Factor	Issues
Pane Size	Smaller glass panes generally have higher blast load capacities than larger panes because they are relatively stiffer. If the capacity of panes is too large, significantly increased loads may be transferred to the framing system. The framing system must be designed to accept such loads.
Glass Type	Annealed glass has a breaking strength that is about one-half that of heat strengthened glass and approximately one-fourth that of fully tempered glass (Hinman 2005). All three glass types can be used as components of a laminated glazing assembly. Lesser breaking strengths reduce load transfer to supporting infrastructure (i.e., frames and walls) while greater breaking strengths increase load transfer.
Pane Thickness	Since a thicker pane of glass is relatively stiffer than a thinner pane of the same size and material composition, it is generally desirable to use the thinnest compliant glazing in order to minimize load transfer to the framing system.
PVB Thickness	An interlayer that is thicker and more tear resistant than that specified in UFC 4-010-01 may be appropriate as performance requirements dictate.
Frame Bite	A relatively flexible pane of glass requires adequate frame bite so it has room to flex and absorb energy in a blast. Inadequate frame bite may cause the entire pane to become dislodged from the frame.
Structural Sealant	A structural-grade sealant may be used to physically attach glazing to the frame. The use of structural sealant lessens frame bite depth requirements, but use of a structural sealant should be evaluated on a case-by-case basis.

UFC Section B-3.1.1.1, *Glazing*, prescribes the standards for compliant blast-resistant glazing, assuming that the required standoff distances are in place. At a minimum, ¼” nominal laminated glass should be used for any single pane used in blast-resistant window applications. Such a pane consists of two nominal 1/8” annealed glass panes bonded together with a minimum 0.030-inch PVB interlayer. For insulating glass units (IGUs), the ¼” laminated glass pane should be used, as a minimum, for the in-

board pane. However, the baseline threat and standoff will dictate the true glazing design.

As a guide to designers, the required thickness of laminated glass and associated PVB interlayer in single panes can be determined by using UFC Table B-2, *Laminated Glass Thickness Selection for Single Pane Windows*. For IGUs, the required thicknesses can be determined by using UFC Table B-3, *Laminated Glass Thickness Selection for Insulating Glass Unit (IGU) Windows*. These tables effectively provide for the applicable level of protection given a design explosive charge weight (I or II) and standoff distance. UFC Tables B-2 and B-3 are based on the application of ASTM F2248, *Standard Practice for Specifying an Equivalent 3-Second Duration Design Loading for Blast Resistant Glazing Fabricated with Laminated Glass*, and ASTM E1300, *Standard Practice for Determining the Load Resistance of Glass in Buildings* and are adjusted for the applicable level of protection. For reference, UFC Table B-2 is reproduced below as Table 4.4.

Table 4.4. Laminated Glass Thickness Selection for Single Pane Windows (UFC 4-010-01, Table B-2).

Applicable Level of Protection	Applicable Explosive Weight	Nominal Laminated Glass and PVB Interlayer Thickness Requirements (1)			
		At Conventional Construction Standoff Distance (2)		Between Conventional Construction and Minimum Standoff Distances (2)	
		Nominal Glass Thickness	Minimum Interlayer Thickness	Nominal Glass Thickness	Minimum Interlayer Thickness
Low	I	6 mm (1/4")	0.75 mm (0.030")	F2248/E1300 – 3 mm (1/8") (3)(4)	1.50 mm (0.060")
	II			F2248/E1300 (3)	1.50 mm (0.060")
Very Low	I	$F2248_{45}$/E1300 (5)	1.50 mm (7) (0.060")	Refer to DoD Security Engineering Facilities Design Manual	
	II	$F2248_{10}$/E1300 (6)	1.50 mm (7) (0.060")	Not Applicable (8)	

(1) Nominal thickness will be achieved by laminating two thinner glass panes of the same thickness to achieve the nominal thickness.
(2) Refer to Table B-1 for applicable standoff distances.
(3) Enter ASTM F 2248 with the applicable explosive weight and the actual standoff distance achieved to determine the equivalent 3-second duration design loading.
(4) Calculate the required laminated glass thickness for this pane by subtracting 3mm (1/8") from the thickness determined by ASTM E 1300.
(5) For this window, enter ASTM F 2248 with explosive weight I at a standoff distance of 45m (148') to determine the equivalent 3-second duration design loading. The laminated glass thickness selected for this design loading may then be used at the 25m (82') conventional construction standoff distance.
(6) For this window, enter ASTM F 2248 with explosive weight II at the 10m (33') conventional construction standoff distance to determine the equivalent 3-second duration design loading.
(7) For standoff distances greater than the conventional construction standoff distance, lesser interlayer thicknesses may be allowable based on analysis, but they shall not be less than 0.75 mm (0.030")
(8) Conventional construction standoff distance = minimum standoff distance.

ASTM F2248, provides designers with a straightforward approach for producing blast-resistant glazing designs without live blast testing. It also fa-

cilitates the determination of a 3-second design load associated with a given baseline threat. In essence, ASTM F2248 converts the parameters of a baseline threat (standoff distance and charge weight) to an equivalent uniform static load by means of empirical correlation. Once the equivalent 3-second static load is determined, ASTM E1300 is used to choose a laminated glass thickness. The glazing selection process may thereby be completed without calculating the actual dynamic loading parameters (peak positive pressure and impulse) normally required for blast-resistant design. Because ASTM E1300 applies only to square or rectangular glass constructions, this method cannot be used to select and design glazing for irregular window shapes found in some historic buildings.

Using replacement glazing in historic buildings is not a major historic preservation concern unless the specific reflective qualities of the original glass are important in preserving a building's historic appearance. As noted in the discussion of *SOI Rehabilitation Standard 9* (page 22), tints and coatings are available to alter the visual qualities of replacement laminated glazing if necessary to maintain a specific reflective quality for historic preservation purposes. It should also be noted that various glass heat-treatments can produce visual distortions of the pane (Vigener and Brown 2007).

Another aspect of glazing that has historic preservation implications is the use of insulating panes. Because the service life of thermal seals is limited, and generally shorter than the service life of a single pane window, maintenance and repair complications may arise in blast-resistant insulating units. If thermal efficiency is important for the application, it may be best to specify standard laminated protective glazing and install separate storm windows for energy conservation. Such an approach would be appropriate in cases where storm windows have historical precedents. Separating the blast-resistant glazing component from the insulating portion may be the best strategy for dual compliance and life-cycle affordability.

Window frame selection and design

Considering that framing elements are central both to blast window functionality and historic appearance, framing design is a critical element in dual compliance.

Framing requirements

In most cases, structural frame members must be designed with enough capacity to resist loading equivalent to the fracture strength of the glazing material. In other words, the framing system must be designed to resist the load that the glazing would transfer, up to its fracture strength, in a blast.

The UFC's prescriptive requirements for blast-resistant window frames (Section B-3.1.1.2) specify that blast-resistant window frames, muntins, and sashes are to be constructed of either aluminum or steel. The framing members must be designed to be stiff enough to restrict edge deflections to no more than 1/160 of the length of the supported edge (in accordance with ASTM F2248) so the glazing does not become dislodged in a blast. The UFC Standard duly notes that, for existing buildings, complying with the standard may require replacement or significant modification of the existing framing elements.

For most blast-resistant window applications, an aluminum frame will be sufficient to meet the UFC standard. Accordingly, most manufacturers use aluminum frames in their window systems. However, in applications where the windows are designed to resist a greater baseline threat, steel frames may be required. In either case, the materials used in the metal frames must comply with the provisions of ASTM F2248.

Another aspect of frame design that is prescribed by UFC Section B-3.1.1.3 is *glazing frame bite*, the term used to describe how the frame mechanically interlocks with the glazing. In some instances, a deeper frame bite may be prescribed both to restrain relatively large panes of glass or as part of a system designed to provide higher levels of protection. For blast-resistant applications, the holding capacity of the glazing frame bite is increased when a structural sealant takes the place of traditional wet seals or gaskets.

Glazing frame bite requirements are stipulated in ASTM F2248 for structurally and non-structurally glazed window systems. ASTM F2248 assumes that blast-resistant glazing is adhered to its supporting frame using either a structural silicone sealant or nonstructural adhesive glazing tape. For structurally glazed applications, a bead of structural sealant should be applied to both sides of the glazing panel for single panes, but is only needed on the inboard (laminated) side of IGUs. Structural-grade sealant

can also be used to help affix larger panes, which deflect more than small ones under blast pressure, into their sash. The sealant is applied around the edge of the glazing face where it laps under the window frame. Frame bite and sealant bead width must be designed so the sealant fails before the PVB interlayer in laminated glazing (Norville and Conrath 2001, Hinman 2005). To this end, minimum and maximum structural sealant widths and thicknesses are prescribed in ASTM F2248. Additionally, unlike IGU thermal seals, structural sealant can be effectively replaced.

Secondary framing members

Many historic windows are designed with secondary framing members called *muntins*. Historically, muntins were functioning structural members used to hold small, adjoining panes of glass together in a larger sash. However, in both past and current construction, muntins also may appear as a nonstructural, decorative feature. Where authentic muntins are used, the small panes of glass they hold are stiffer than larger panes of the same material, so the smaller panes may not fracture under pressures that would break larger panes. For that reason, muntins in blast windows must have sufficient strength to accept a blast load from the glazing and transfer it to the sash and building structural members. Depending on the protective requirements of the application, structural muntins that are strong and stiff enough to meet the minimum AT standards may be visually incongruous with historic window profiles.

To preserve the appearance of authentic muntins in a historic window replacement project, the most practical approach may be to specify a conventional blast window with nonstructural decorative muntins, which many manufacturers call *grilles* (Hinman 2005). In blast-resistant applications, grilles are placed on the exterior face of the glazing to prevent them from entering the occupied space as debris in a blast. In double-pane insulating glazing, grilles may be mounted on either face of the outboard pane.

Window profile: material composition and operability

In the context of historic preservation, the primary and secondary framing elements that comprise the outline of a window in side view are referred to as the *window profile*. In historic architecture, window profiles typically reflect frame material composition and type of operability.

The material composition of framing elements is often evident in the massing of the window profile. Wooden window components, for example, would need to be substantially larger than a metal component designed to support the same load. Profiles assembled with long, thin elements are likely to be metal or other material with a high strength-to-weight ratio. In a historic window replacement project, the replacement components would ideally be made of the same material as the original units. Not surprisingly, wood sashes perform poorly in a blast environment, so wood is rarely an option in blast-resistant replacement windows. Hence, when alternate materials must be used in place of the original wood, care must be taken to replicate the appearance of the original window profile in conformance with the SOI rehabilitation standards.

The window profile often indicates window operability. A sash offset may indicate a sliding or hung window (Figure 4.1); the absence of an offset may indicate a casement, awning, or hopper window (Figure 4.2). Meeting rails in the middle of a glazing expanse may indicate operable insets within a fixed unit, such as might be found in a factory window (Figure 4.3).

Figure 4.1. Sliding (left) and hung (right) windows (ERDC-CERL 2007, 2004).

Figure 4.2. Awning (left) and hopper (right) windows (ERDC-CERL 2007).

Figure 4.3. Factory-style muntins and mullions (ERDC-CERL 2007).

Window operability provides two vital services: (1) indoor climate control and (2) emergency egress and ingress. Accordingly, window operability is often a consideration in blast-resistant window design. The effectiveness of blast-mitigating window systems depends in large part on maintaining closure of fenestrations to reduce flying and falling debris to the greatest extent possible. This requirement directly conflicts with operability, however, and many of the currently marketed blast windows eliminate operability, making them potential obstacles for first responders in case of emergencies (Smith and Renfroe 2005). UFC-compliant ¼ in. laminated

glazing is reasonably penetrable with standard forcible entry tools (Stone 2003), but systems designed with different materials for heavier blast loads may be quite difficult for emergency personnel to penetrate.

Operable window sashes are generally not recommended for blast resistance because building occupants can partially defeat their protective function simply by opening the window. One known conceptually viable blast-mitigating solution is a *self-closing* system. These systems employ hinged operable sashes that tilt outward to open. The location of the hinged edge is based on the probable direction of the explosive threat. For windows located in wells below grade, a self-closing awning-style window could be specified. Building exteriors with alcoves with unidirectional access may benefit from self-closing casement windows hinged on the edge located closest to the assumed direction of detonation. Regardless of hinge location, the self-closing window is designed so that it will slam shut when hit with a blast wave. If this type of design is used, the governing design parameter is likely to be the capacity of the hinges about which the window rotates (Hinman 2005).*

The SOI rehabilitation standards favor retaining historic operability in a window replacement project, but in a blast window project it is possible that functional deviations will be necessary to meet the DoD minimum AT standards. In order to promote dual compliance to the greatest extent feasible, an attempt should be made to minimize any visual impacts that result from changes in window operability.

Difficulties associated with multi-sash window units

In general, designing multi-sash blast windows is cumbersome due to the mechanics of multiple sashes. A double-hung unit, for instance, requires two especially strong tracks that restrain each sash during blast loading, while also allowing for sash operability. These tracks are part of a track-frame assembly that must be robust enough to adequately transfer blast loads from the sash through the track to the frame. Furthermore, an overly large track-frame assembly may have substantial anchorage requirements that may be problematic for walls in historic buildings that may not be

* Operable hung or sliding windows do not adapt to a self-closing system because their sashes are not hinged. These windows are confined to slide vertically or horizontally in tracks integrated into the window frame. Hopper windows are also not suitable in a self-closing design because they open to the building interior, thus facilitating the entry of blast pressures into the building.

thick or strong enough to meet the UFC anchorage requirements. These complications are compounded with triple-hung units. The wall's resistance to stresses created by a blast dictates the limitations on window anchorage alternatives, and that in turn dictates window type alternatives. Consequently, changes in window operability will often be necessary to tailor blast window anchorage requirements to the historic wall structure.

In a blast window project for historic buildings, a properly designed casement window may be a suitable alternative for a historic double-hung window. Casement windows do not require the complex tracking assemblies needed for double-hung units, and they can be manufactured to resemble double-hung windows in profile. Cultural resources personnel can assist protective design engineers and window manufacturers in selecting replacement products fabricated to replicate the shadow lines of the historic window profiles. This is especially important when reducing the number of operable sashes, as the sashes operate in different planes. Attention also should be paid to replacement window hardware, which should integrate with and preserve distinctive interior aesthetics. Figure 4.4 illustrates the challenges of incorporating new casement functionality and hardware into fenestration designed for double-hung units. The interior wall was carved out to provide clearance for the casement cranks and locks. If this interior space had been historically significant, the illustrated solution would not comply with the SOI standards.

Figure 4.4. Awkward resolution of casement hardware in former double-hung window opening (Army 2004).

Anchorage and structural strength

In recent years, substantial resources have been spent on research and development of blast-resistant window systems. Nonetheless, there have been relatively few investigations into the behavior of the connectors that hold these window systems in place during a blast. ASTM International, DoD, and GSA have all published guidance documents that address window system performance at specific blast loads and standoff distances. However, detailed window system anchorage guidance remains largely unavailable. Blast-resistant window systems can not reach their full protective potential if their anchorage systems are not well designed and understood (Ward 2005).

Since conventional construction is not designed to resist bomb blasts, a major consideration in selecting blast-resistant windows for an existing building is whether the building's structural system is strong enough to

withstand the same blast loads for which the windows are designed. A blast-resistant window will not protect occupants if it dislodges due to failed connectors or a weak supporting structure, or if the wall it is mounted in collapses in the explosion (WinDAS 2001).

Connection requirements

The hardware used to attach window frames to a building's supporting structural elements is a critical link in blast load transfer. For this reason, UFC Section B-3.1.1.4, *Connection Design*, provides design criteria to prevent connection failure. Connection adequacy may be demonstrated either by calculations or dynamic blast testing.

If calculations are used, the connection design load is determined in accordance with ASTM F 2248 and ASTM E 1300, and based on the applicable explosive weight at the actual standoff distance at which the window is sited. All designs must account for the geometry of the window frame and the configuration of the connectors when calculating design loads. Allowable fastener loads are those recommended by the fastener manufacturer for the given anchorage condition.

If dynamic testing is utilized, the UFC requires that the type, number, arrangement, and orientation of the fasteners must be the same in the test as in the fielded application, including eccentricities between the glazing system frame and the line of action of the connections. Furthermore, for legitimate test results, the structural supporting material used in the test for fastener attachment must be representative of the fielded application. Calculations must be used to validate any anchorage design deviations necessary to accommodate field conditions.

Blast-resistant window anchors

Anchors derive their holding capacity by interacting with the parent wall material according to one or more of the following principles: friction, bearing, and bonding, or adhesion (Ward 2005). The characteristics of the wall (composition, dimension, integrity, etc.) dictate which principle or combination thereof is best for a given circumstance. There are a number of different ways that anchorage systems can fail, though most potential failure modes stem from a shear failure of the wall material (Ward 2005).

Anchorage configurations should be evaluated on a case-by-case basis, and the connectors should be chosen such that the design load can be effectively transferred from the window frame to the supporting structural elements. For concrete, brick, and concrete masonry unit walls, ¼-in.diameter self-tapping concrete Tapcon® (or equivalent) screws are often specified. More sophisticated mechanical connectors include wedge anchors, sleeve anchors, and expansion anchors. Adhesive and mechanical anchoring systems are offered by companies such as Hilti® for a variety of different applications (Figure 4.5).

Figure 4.5. Hilti® threaded rod (above) and sleeve (below) anchors (Hilti® website).

Fastener manufacturers (e.g., Hilti® and Tapcon®) produce design guides for users of their products. The allowable static loads presented in these guides are typically based on testing results and generally have a safety factor of two to six times that of tested failure loads.

Supporting structural elements

In UFC 4-010-01 the term *supporting structural elements* refers to the structural members to which the window system is attached. In buildings with load-bearing façades, the supporting structural element is the wall surrounding and forming the rough window opening. Section B-3.1.2 of the UFC addresses structural design capacities for successful blast load transfer between the window anchorage and supporting structural elements.

There are a number of structural elements and configurations that may be used to support blast-resistant window systems, thus providing for a wide variety of anchoring conditions. The properties of the supporting material inevitably affect the selection of suitable anchor types, and the number and size of anchors that are needed to transfer design blast loads to sup-

porting elements. Most DoD historic buildings are composed of poured reinforced concrete, concrete masonry units, brick masonry, terracotta blocks, or ashlar-cut stone. Masonry units can be solid or hollow core, and their constructs may be reinforced, unreinforced, or filled with random stone rubble (Ward 2005). For some wall construction types, such as those made of terra cotta, the adequacy of the connection is likely to be questionable due to the brittleness of the parent material. The same holds true for older buildings with weather-weakened masonry walls (Ward 2005).

Rehabilitation considerations for masonry construction

Some historic construction methods, building forms, and wall configurations are inherently weaker than necessary for a blast window retrofit project. In such cases, structural modification and special-purpose window connections may be needed to comply with UFC 4-010-01. For example, unreinforced masonry walls may not provide sufficient capacity to resist out-of-plane blast loads.* Therefore, suitable masonry reinforcement and attachment techniques must be developed into any rehabilitation project (Hinman 2005). One method termed *coring* may be used to structurally reinforce previously unreinforced masonry. Alternatively, a steel reinforced concrete or shotcrete skin may be applied to the interior surface of the existing wall, thus providing for a secondary wall which is adequately reinforced (Ward 2004). A variety of other methods are possible as well.

Even if the walls are determined to have sufficient strength and integrity, some structural preparation may still be necessary adjacent to the window rough opening to rehabilitate non-uniform conditions or structural soft spots. Where structural rehabilitation is needed around a window opening, high-strength grout and steel reinforcement may be necessary to provide a satisfactory substrate for window anchors. The grout is applied using methods best suited to the specific conditions (e.g., hand-packing, troweling, injecting, or pouring).

Masonry construction also may pose challenges related to design and construction methods. Some historic buildings use tapered masonry walls which are thicker at the foundation than at the roofline. The taper has im-

* It should be noted that some unreinforced and underreinforced masonry walls will not fail when subjected to UFC-specified blast loads. The adequacy of supporting structural elements surrounding window rough openings should be determined in any blast-resistant window replacement project.

plications related to attachment methods and replacement sash limitations. The lower portions of such walls may be thick enough for multi-sash replacement blast windows, but the upper concrete or masonry sills may be too thin to develop the shear capacity needed for sufficient anchorage (Lin, Hinman, Stone, and Roberts 2004). In such cases, single-sash casement or other hinged windows can be used at upper fenestration, and they may be outfitted with exterior grilles designed to replicate the profile of the lower multi-sash windows.

In buildings with masonry walls that are uniformly too narrow for even single-sash unit anchorage, alternate attachment methods may work. One method is to anchor the window assembly to horizontal structural members, such as floor and ceiling diaphragms. To meet UFC 4-010-01 requirements, however, these horizontal members must provide sufficient capacities. Therefore, the method is not appropriate for most wooden horizontal members incorporated into masonry structures.

Some applications for historic buildings will require attachment designs that provide new structural elements near the windows. Clerestory windows may require additional vertical bracing, probably spanning floor to ceiling, for adequate support. Similarly, curtain walls with narrow pilasters between window expanses may require supplemental vertical bracing at pilaster locations (Hinman 2005).

Dual compliance issues and opportunities

By their nature, window replacement projects involve the removal of existing building materials, and in historic properties those materials may contribute to a building's significance. Although conflicts with SOI Standard 2 on preserving historic character are inevitable in most cases, there may be unforeseen historic preservation opportunities in a blast window project. For example, a blast window program mandated by UFC 4-010-01 may provide the opportunity to reverse previous inappropriate window replacements. There is no fundamental reason why military installations cannot replace historically incompatible, ill-fitting replacement units installed previously with blast-resistant windows that properly fit the historic window openings and match the building's historic appearance. Although it is often not possible to retain historic material composition and modes of operability, it is relatively easy to specify window designs that replicate the historic fenestration size, framing profile, muntin patterns, colors, and decorative features.

At the same time, building-specific design of blast-resistant replacement windows is crucial to providing the required level of protection for occupants of historic properties. Building-specific design is the first step not only toward good historic preservation practices but also toward compliance with UFC 4-010-01. Whether the windows to be replaced have nonfunctional muntins; whether they are configured as freestanding units, continuous ribbons, curtain walls, or storefronts; or whether they occur in doors, skylights, or other fenestrations; for DoD, the benefit of this approach for historic properties is dual compliance with UFC 4-010-01 and the SOI rehabilitation standards.

5 Computational Analysis and Live Blast Testing

The need for alternate methods of analysis and testing

Due to the complexities of an explosion and its interaction with the surrounding environment, it may be impossible to accurately engineer or design a properly functioning blast-resistant window system based solely upon UFC 4-010-01 prescriptive guidance. Additionally, project-specific requirements, such as optional glazing (e.g., polycarbonate glazing or laminated glass with an alternative interlayer) or window assemblies with irregular form (e.g., curvilinear), are not accounted for. When the prerequisites for a purely prescriptive design approach cannot be met, Section B-3.1.4 (Alternate Method of Analysis) and Section B-3.1.5 (Testing) of UFC 4-010-01 directs that project-specific blast window designs must be developed to provide the required level of protection.

UFC section B-3.1.4 (Alternate Method of Analysis) describes an alternative to the prescriptive design approach discussed in chapter 3. This subsection asserts that glazing, framing members, connections, and supporting structural elements may be designed using dynamic analysis to demonstrate the window system will provide performance equivalent to or better than the hazard rating associated with the applicable level of protection.

Dynamic analysis may be done using hand calculations, but in most cases computer software is necessary to provide accurate results. The primary two input design parameters for dynamic analysis are the peak positive pressure and impulse associated with the applicable explosive weight at the actual standoff distance at which the window is sited. In many cases, dynamic analysis is used by designers and/or manufacturers prior to subjecting a window system to live dynamic blast testing. An overview of dynamic analysis methods and currently available software programs is provided below.

Predictive modeling alternatives

Finite element methods

Advanced finite element method (FEM) models typically provide the most accurate and reliable analytical results because they can account for many variables that simplified methods often cannot. However, finite element methods require a substantial amount of time and money for constructing the model, engineering expertise to build the model, and considerable knowledge to interpret the output. Therefore, in many cases, FEM analysis is not viable. Alternatives requiring less expertise, time, and cost are available to provide engineering approximations that are suitable for blast window design purposes (Sunshine, Amini, and Swanson 2004).

Single-degree-of-freedom modeling

A practical, widely used method for analyzing blast window loads and performance is called single-degree-of-freedom (SDOF) modeling. Using this approach in a dynamic analysis, a specific window system or component is highly idealized by aggregating its entire mass at a single theoretical point. The deflections determined from the SDOF system are equivalent to the deflection of a specified point in the real-world building or component. When all relevant deflections are calculated, basic structural analysis principles are used to proceed with the analysis and design. The SDOF formulation in many blast calculations is relatively simple, and results can be calculated by hand. However, to expedite the process and to make this modeling approach available to non-technical personnel, several SDOF computer algorithms are available for automated analysis (Sunshine, Amini, and Swanson 2004).

Pressure-impulse diagrams

A pressure-impulse (P-I) diagram is a graphical tool that designers can use to estimate window system damage due to blast loads. These diagrams consist of iso-damage curves (curves of equal damage) that are predominately based on historical testing data. The curves are plotted in a pressure-impulse space in which the pressure axis represents the peak overpressure of a blast wave and the impulse axis is the total positive phase impulse from the blast wave. For blast-resistant window design applications, iso-damage curves typically represent hazard ratings as specified by the standards organization (low, minimal, high, etc., in ASTM F1642). A specific threat (bomb size and standoff distance) can be converted to an

equivalent pressure-impulse couple and plotted as a discrete point on the P-I diagram. The location of the point is then viewed in relation to the curves. If the point is below or to the left of a curve, the damage would be less than that indicated by the curve. If the point is above or to the right, the structural component would receive more damage than indicated by the curve. An example of a P-I diagram is shown below in Figure 5.1.

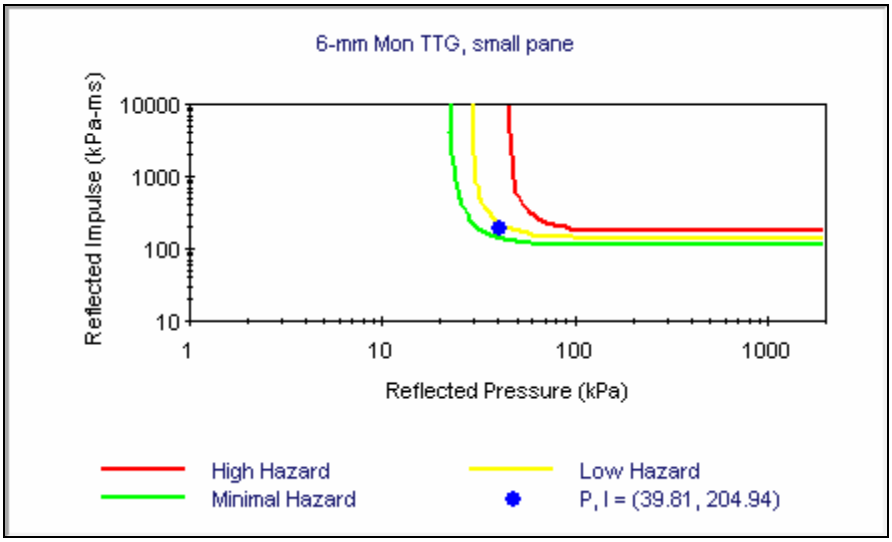

Figure 5.1. Example of a P-I diagram (WinDAS 2001).

Software

The dynamic response of structures and components to an explosion is complex and difficult to analyze through traditional engineering methods. However, several computer-based tools are available to help engineers with the design of blast-resistant window systems (Sunshine, Amini, and, Swanson 2004). Various analysis algorithms, implemented as computer software, can be used to analyze the blast resistance of a glazing pane. Software packages such as WinDAS and HAZL have been developed by the military and are available free of charge to DoD and its contractors. One other known software program, *Blast Resistant Glazing Design (BRGD) 2007*, is offered to the public by Standards Design Group, Inc. for a fee. BRGD automates the procedures of ASTM F2248 and E1300. Although most software available today focuses solely on glazing and its associated hazards, research programs currently under development analyze multiple window system components.

WinDAS

The most significant component of the WinDAS, or *Window Design and Analysis Software*, package is the database of tested window assemblies, but it also includes a feature called the 'hazard predictor.' To use it, the operator must input a bomb size and standoff distance (or a reflected pressure and reflected impulse) and then select a window size and type to be analyzed. A P-I diagram is then displayed that indicates the predicted hazard level for the given input parameters. The user-friendly interface allows almost anyone to quickly forecast the hazards associated with a variety of threats and window types. WinDAS also includes a comprehensive and searchable database that currently holds over 1,000 records of previous blast tests on window systems. Each record may include data, photos, and discussion pertaining to the given test. Finally, an 'analysis guide' provides pertinent information about the software and a general discussion of how to perform an analysis (Conrath, no date; WinDAS 2001).

HAZL

HAZL (Window Fragment Hazard Level Analysis) is another DoD-developed analysis tool. It performs a single degree of freedom analysis to calculate glazing response from a blast load. Output includes the hazard level, glazing response parameters, reaction loads, and required frame bite. HAZL software also includes a fragment flight model that can predict fragment trajectory. Like WinDAS, HAZL can also produce P-I diagrams based on a specified window (HAZL 2002).

Similar available single degree of freedom programs include *WINdow Glazing Analysis Response and Design* (WinGARD)* and *WINdow Lite Analysis Code* (WinLAC)†, developed by GSA and the State Department, respectively.

Live blast testing

With the introduction of predictive models and software, designers and manufacturers have the means to better understand the nuances of blast-

* WinGARD is available from GSA at www.oca.gsa.gov. This computer program is the GSA and ISC standard for analysis and design of windows subjected to blast loads (GSA 2003).

† WinLAC is available from the US State Department. Versions 4.0 and later are derivative versions of the GSA WinGARD code adapted to meet the unique requirements of the State Department (GSA 2003).

resistant window design. A design can be refined with the aid of such tools before a window is subjected to live blast testing. This not only can save time, money, and design iterations, but analysis prior to testing may result in a significantly better product than that of the original concept. Eventually, however, the prototype window system should be tested in either an open air arena or a shock tube to ensure compliance with UFC Section B-3.1.5, *Testing*.

For many historic building applications, blast-resistant window designs will require system testing to prove (or disprove) product reliability for a given threat, and standoff distance, and set of design parameters (window size, existing supporting structural elements, etc.). As mentioned previously, UFC Section B-3.1.5 sets forth an alternative to the prescriptive design approach whereby window systems may be dynamically blast tested. Testing trials are intended to demonstrate performance equivalent to or better than the hazard rating associated with the applicable level of protection required for a given building. They must be performed on the entire window system, including connections, in accordance with ASTM F1642. Contemporary blast testing may take place in either an open air arena or within the confines of a shock tube.

Open air arena testing

Throughout the mid 1980's and early 1990's many blast-resistant window products were tested by means of an 'open frame' testing procedure. This relatively simple testing method usually consisted of placing two panes of glass specimens side-by-side mounted in rigid frames, but with no enclosure or structure around the frame. Generally, one of the specimens would be backed with an applied security film (or would consist of laminated protective glazing), and the other would consist of annealed or tempered monolithic glass. Then, an explosion (typically of arbitrary size and at a random standoff) would be triggered nearby. The unprotected specimen would usually shatter into thousands of pieces, while the protected specimen would fracture while keeping its pieces of glass held intact (IWFA, 1999) partly due to what is known as the 'wrap-around' effect. Because the glazing and frame assembly was not enclosed, the blast wave was able to quickly wrap around the frame and momentarily support the glass from the backside, thus aiding in damage mitigation (Harpole 2001).

These 'open frame' tests were conducted in part for marketing purposes and did not follow any specific testing protocol. This type of testing does

not provide accurate representation of real-life blast scenarios. In fact, these tests did not in any way attempt to measure the blast resistance of entire window systems, but rather were a subjective approach to impress upon bystanders the safety characteristics of glazing materials. Open frame tests have been virtually abandoned in recent years (Harpole 2001).

Open air arena testing, the currently sanctioned method of air field testing, is achieved by mounting complete window systems in an enclosed reaction structure (replicating a building) such that the blast overpressures more closely imitate actual results of a specified baseline threat. The test reaction structures prevent the rapid blast pressure engulfment of the test specimen and can be constructed to replicate particular portions of buildings. This allows the glazing, frame, and anchorage of a tested window system to be used for a given application if the test yields positive results. Open air arena tests can be very expensive, but cost per specimen decreases when numerous items are tested at once. The open air arena test yields accurate performance representations when conducted in accordance with ASTM F1642. These tests are truly only limited by open space and charge configurations.

Figure 5.2. Open air arena window testing (WinDAS 2001).

Shock tube testing

Blast-resistant window systems can be tested in a steel enclosure known as a shock tube. Within the shock tube, compressed air, fuel air mixtures, or line charges are used to replicate specified blast events. In the majority of

cases, compressed air is utilized whereby the compressed air is released by bursting a diaphragm. The release of air creates a loading similar to the positive phase of an explosively formed shockwave. This method results in excellent reproductions of an explosive blast, but without the expense or associated explosive hazards that come with open air arena testing.

Due to space limitations within the steel enclosure, many shock tubes can only accommodate one window aperture (of limited size) per test. However, since shock tube tests are more readily controlled, they can more accurately provide repeatable results from test to test as compared to open air arena tests. There are substantial factors such a wind, rain, temperature variances, ground absorption of the detonation, etc. that can affect the tests in an open air arena. These factors are highly controlled within a shock tube environment (IWFA 1999). Hence, shock tubes are typically used to repeatedly test identical specimens

The primary drawback to shock tubes is their inability to accurately replicate the negative phase pressures created by a true bomb blast (or open air arena test). Some shock tubes can produce a partial negative phase but they do not replicate the actual negative phase. Occasionally the positive phase results often do not replicate the actual positive phase.

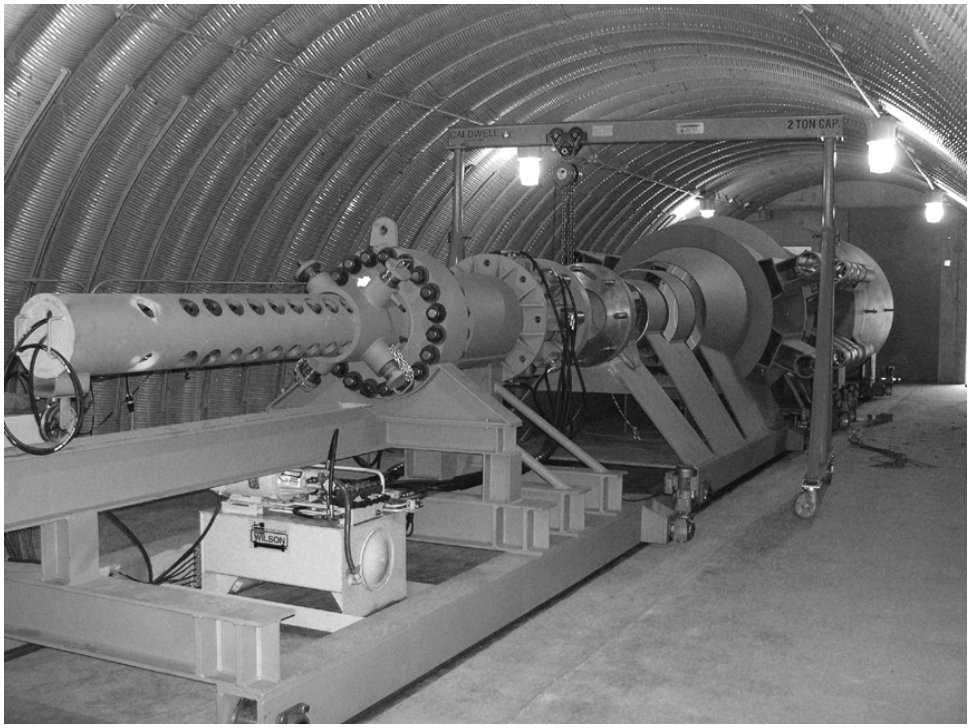

Figure 5.3. Shock tube (GSL 2004).

DoD performance-based testing standard using ASTM F1642

Currently, there is not a single, unified performance-testing protocol for the design of blast-resistant window systems. For buildings owned and occupied by DoD, UFC 4-010-01 designates ASTM F1642, *Standard Test Method for Glazing and Glazing Systems Subject to Airblast Loadings*, as the governing document. ASTM F1642, developed by *ASTM International*, presents the industry with standardized practices for design by providing a structured procedure to establish the hazard rating of glazing and window systems subjected to a prescribed airblast loading. Aside from being the governing document for buildings owned and occupied by DoD, ASTM F1642 is also utilized for many applications in the private sector.

The General Services Administration (GSA) relies on their own governing document entitled *U.S. General Services Administration Standard Test Method for Glazing and Window Systems Subjected to Dynamic Overpressure Loadings*. This standard is the sole test protocol by which blast resistant windows are evaluated for facilities under the control of GSA. Manufacturers that wish to have their products used in GSA facilities must test their products using the GSA standard test method (Smith 2003). This test method uses the Interagency Security Committee (ISC) Security Design Criteria (ISC 2001) to rate the performance of window systems subjected to airblast loads.* Although this standard is similar to that utilized by DoD, a window system tested successfully under the authority of the GSA standard is not necessarily considered acceptable for DoD application until it meets UFC 4-010-01 provisions. One major difference between the two standards is that the GSA specifies a 48” x 66” typical window size for testing while ASTM F1642 does not specify window dimensions.

The Department of State (or State Department) has more stringent window testing standards (e.g., higher loading parameters and more rigorous window system response characteristics) than either DoD or GSA, the details of which are outside the scope of this document.

* The ISC is a group of federal agencies and officials, chaired by the GSA, responsible for policies, standards, strategies, and enhancements for security in and protection of federal facilities, including their implementation. The ISC was created by executive order on 19 October 1995 (EO 12977).

ASTM F1642 general testing procedure

Per ASTM F1642, a minimum of three test specimens representative of a single window system must be tested at a given level of airblast, defined in terms of peak pressure (*P*) and positive phase impulse (*i*). Since the UFC does not prescribe these design parameters, but rather standoff distance and explosive charge weight, they must be converted as appropriate as described in "Dynamics of an explosion," page 4. Either a shock tube or a high explosive charge in an open air arena can be used to generate the appropriate blast load on the test specimens.

The area immediately behind and surrounding the test specimens is designated as the 'witness area' and it has specific dimensional characteristics. The floor is located 18-22 in. below the frame opening; the ceiling is located at a minimum of 4 in. from the top of the frame opening; and the sides are located at a minimum of 4 in. from the frame opening. (Alternatively, the window system can be tested relative to its position in a particular building.) The back wall of the witness area is located 114-126 in. from the interior of the window system. A 'witness panel' covers the entire back wall of the witness area and consists of two layers of material: a rear layer of 1 in. thick extruded Styrofoam and a front layer consisting of 0.5 in. thick rigid foam plastic thermal insulation board. The witness panel is used to record spalling and perforations caused by any fractured glazing realized during the test.

In order to accurately record the tests, a variety of instrumentation is necessary. A minimum of three airblast pressure transducers are used to define the pressure history of the blast wave. A data acquisition system (DAS) is connected to pressure transducers and is used to record the pressure history. Photographic equipment is necessary to document the test and a temperature measuring device (TMD) is used to measure glazing surface temperatures. Per ASTM F1642, these surface temperatures must be in the 75 +/- 20 degree Fahrenheit range.

ASTM F1642 hazard ratings

The hazard rating that the window system receives is based upon the severity of glazing fragments* generated during an airblast test. The frag-

* Fragments are defined as any particle with a united dimension of 2.5 cm (1 in.) or greater. The united dimension of a glass particle is determined by adding its width, length, and thickness. Glazing dust and

ment severity is determined based upon the number, size, and location of fragments observed during post-test data gathering. Knowing the hazard rating provides the ability to assess the risk of personal injury and facility damage.

Hazard ratings are defined as no break, no hazard, minimal hazard, very low hazard, low hazard, and high hazard. It should be noted that hazard ratings defined as *no break*, *no hazard*, and *minimal hazard* are always acceptable by UFC 4-010-01 criteria, while a hazard rating defined as *high hazard* is never acceptable. The hazard rating of the glazing or window system is assigned according to the rating criteria definitions provided in ASTM F1642 and shown in Figure 5.4 below.

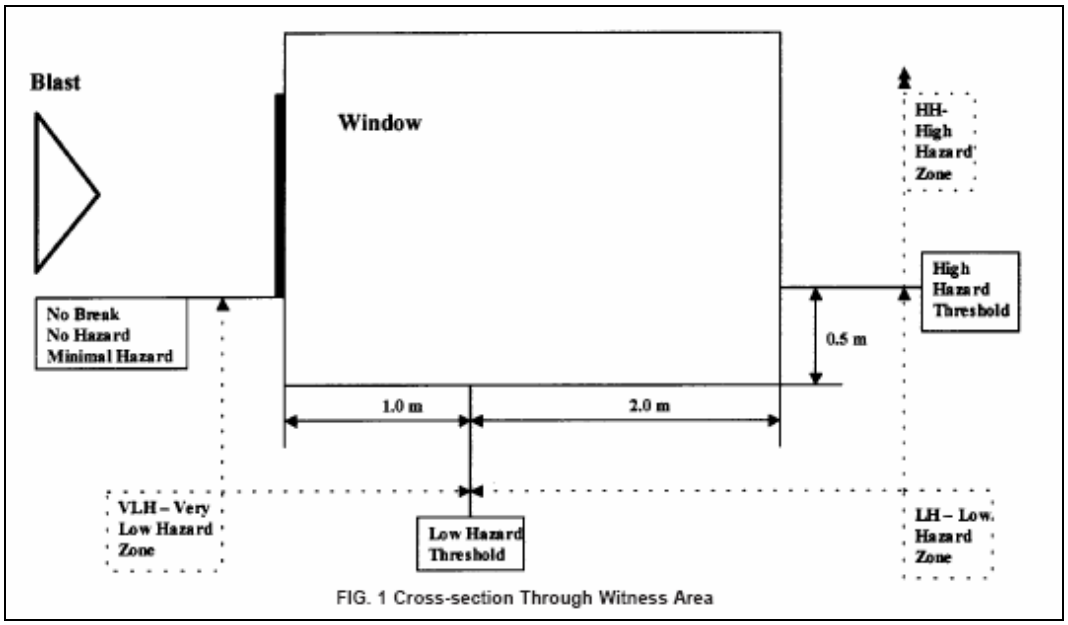

Figure 5.4. Hazard rating criteria for ASTM F1642 (ASTM F1642-04).

As described in "Level of protection," page 30, primary gathering buildings, billeting, and high occupancy family housing require a *low* level of protection and must have blast-resistant window systems that meet or exceed the 'very low hazard' rating set forth in ASTM F1642. As defined within ASTM F1642, a 'very low hazard' rating is described as follows:

> **Very Low Hazard**. The glazing is observed to fracture and is located within 1 m (40 in.) of the original location. Also, there are three or less

slivers are all other smaller particles.

> perforations caused by glazing slivers and no fragment indents anywhere in a vertical witness panel located 3 m (120 in.) from the interior face of the specimen and there are fragments with a sum total united dimension of 25 cm (10 in.) or less on the floor between 1 m (40 in.) and 3 m (120 in.) from the interior face of the specimen. Glazing dust and slivers are not accounted for in the rating (ASTM F1642-04).

Similarly, other inhabited buildings require a *very low* level of protection. Consequently, they must have blast-resistant window systems that meet or exceed the 'low hazard' rating set forth in ASTM F1642. Per the ASTM standard, a 'low hazard' rating is defined as follows:

> **Low Hazard**. The glazing is observed to fracture, but glazing fragments generally fall between 1m (40 in.) of the interior face of the specimen and 50 cm (20 in.) or less above the floor of a vertical witness panel located 3 m (120 in.) from the interior face of the specimen. Also, there are ten or fewer perforations in the area of a vertical witness panel located 3 m (120 in.) from the interior face of the specimen and higher than 50 cm (20 in.) above the floor and none of the perforations penetrate through the full thickness of the foil backed insulation board layer of the witness panel as defined in 8.7.5 (ASTM F1642-04).

Simply stated, a *very low* level of protection requires a low hazard rating as defined in ASTM Standard F1642. A *low* level of protection requires a very low hazard rating as defined in the same ASTM Standard. Although not obvious to the casual reader, these ASTM ratings map to UFC 4-010-01 window criteria.

The ASTM hazard ratings above serve as the benchmarks for performance testing conducted under this research (see Volume 2 for results).

Applicability limitations of protective window products

A blast-resistant window that has been dynamically tested and found compliant with UFC 4-010-01 for a specific application may be assumed to provide the validated performance only when installed in conditions identical to that in which it was tested. Project stakeholders should balk at vendor claims that a blast-resistant window has standardized performance specifications and installation methods across a wide range of applications. Such claims are not supportable because product performance can-

not be validated without due consideration of the building's architecture, materials, and condition (Hays 2003).

Unintended consequences of modifying glazing pane dimensions

Consider the unintended performance consequence of using a window system in an opening smaller than that in which the unit was tested. With all other variables remaining the same, the tested window system used in a smaller opening will act as a relatively stiffer diaphragm than it did during testing. The glazing will respond to the blast load with less flexibility, and may not deform according to design. In such a case, loads may transfer from the glazing far in excess of the system's design capacities, and may possibly exceed the strength of frame members, connectors, or supporting structural elements. One failure scenario would be for the entire window system, largely intact, to implode into occupied space with highly destructive results (Hays 2003, 2004). Therefore, if the selected product must be used in an opening smaller than that for which it was tested, a necessary but counter-intuitive modification may be to reduce the strength of the glazing composition in order to achieve the desired system performance. Such decisions must be reached through analysis, experimental testing, or both.

Conversely, using the selected window in an opening larger than that for which it was tested, the glazing may respond with more flexibility than intended in the design. The consequence could be excessive glazing deformation that leads to separation of the glass from the frame, defeat of the structural-grade sealant, and release of the pane into occupied space with a result similar to that in the previous example. Also as in the previous example, further analysis, experimental testing, or both would be required to ensure that the required level of protection is provided under the design loading.

Although further analysis, testing, or both is often recommended for proposed changes in window size, it may be possible to allow for slightly smaller or larger units without additional analysis or testing. Such decisions should only be made by experienced blast engineers.

Installation considerations

The installation of a blast-resistant window system is typically straightforward in principle. In fact, installing the majority of these windows is not

much different than installing a conventional window. However, faulty workmanship during the installation process can ultimately lead to catastrophic consequences if a blast occurs (Ward 2005). One common mistake, for example, is the installation of insulating glass units with the laminated panes on the outboard rather than inboard side, thus allowing the monolithic insulating panes to shatter into the building interior if a blast occurs.

Anchorage issues are another main concern. These problems most notably occur when installers are unfamiliar with the connectors they are installing or the material to which they are anchoring into.* Such problems may be compounded if adverse site conditions are encountered, or if time constraints result in hasty workmanship (Hays 2003, Ward 2005). After all, anchors are typically not visible once the installation process is complete. For historic building applications, anchorage problems typically occur when building envelope integrity is inconsistent due to weathering or aging. 'Soft spots' may be present at proposed anchor locations requiring that an alternative anchorage strategy be developed. Every field condition that deviates from design conditions ideally requires an engineering review and solution that is validated through analysis, testing, or both (Hays 2003).

The installation of blast-resistant windows demands a high level of installer competency and adequate supervision; without these assurances the potential for inadequately affixed windows increases considerably (Ward 2005). Hence, it is highly advisable to hire veteran window installers with experience in historic building rehabilitation and blast-resistant design. Because substandard installation can potentially result in casualties, it is strongly recommended that all installation contracts include provisions for rigorous quality assurance before work acceptance.

* For weak walls, or those made up of brittle terra cotta or low-clay bricks, appropriately sized anchor holes should be made with drilling equipment that does not undermine wall integrity. Percussion type rotary drills are often used for expedient drilling, but they can cause localized cracking and failure in weak or brittle material. Diamond type rotary drills are slower, but are more sympathetic to the substrate because cutting is done by abrasion rather than by percussion (Ward 2005).

6 Testing Program

Window type selection

Although this testing program could not encompass all historic window types that will eventually require replacement in accordance with UFC 4-010-01, it was a main research objective to test two prevalent historic window profiles found in standard military construction: hung windows and factory-type windows. Performance test results apply only to window systems identical to those tested. Even similar buildings and windows, constructed around analogous structural and fenestration systems, may require different treatments for suitable blast resistance because some UFC 4-010-01 requirements change on the basis of building occupancy and use categories.

Hung window

Hung windows were invented in the 1400s for ventilation purposes, and they became a U.S. construction standard during the 18th century. As advances were made in construction materials, building designs evolved to exploit new material capabilities. As a result, the typical proportions of hung windows changed from tall, narrow configurations to relatively low, broad constructs. Today, most blast testing is conducted on the latter form, yielding performance data and design assumptions that do not apply to tall, narrow hung windows characteristic of 18th- and 19th-century buildings.* For that reason, hung window specimens of historically tall, narrow proportions were selected for testing (Figure 6.1 and Figure 6.2). Hung windows are found in many building types, but they are found in great numbers on large military administrative buildings.

* The General Services Administration (GSA) tends to test 4 ft x 5.5 ft standard windows in accordance with their standard test method entitled *U.S. General Services Administration Standard Test Method for Glazing and Window Systems Subject to Dynamic Overpressure Loadings*. Those dimensions do not emulate early window configurations.

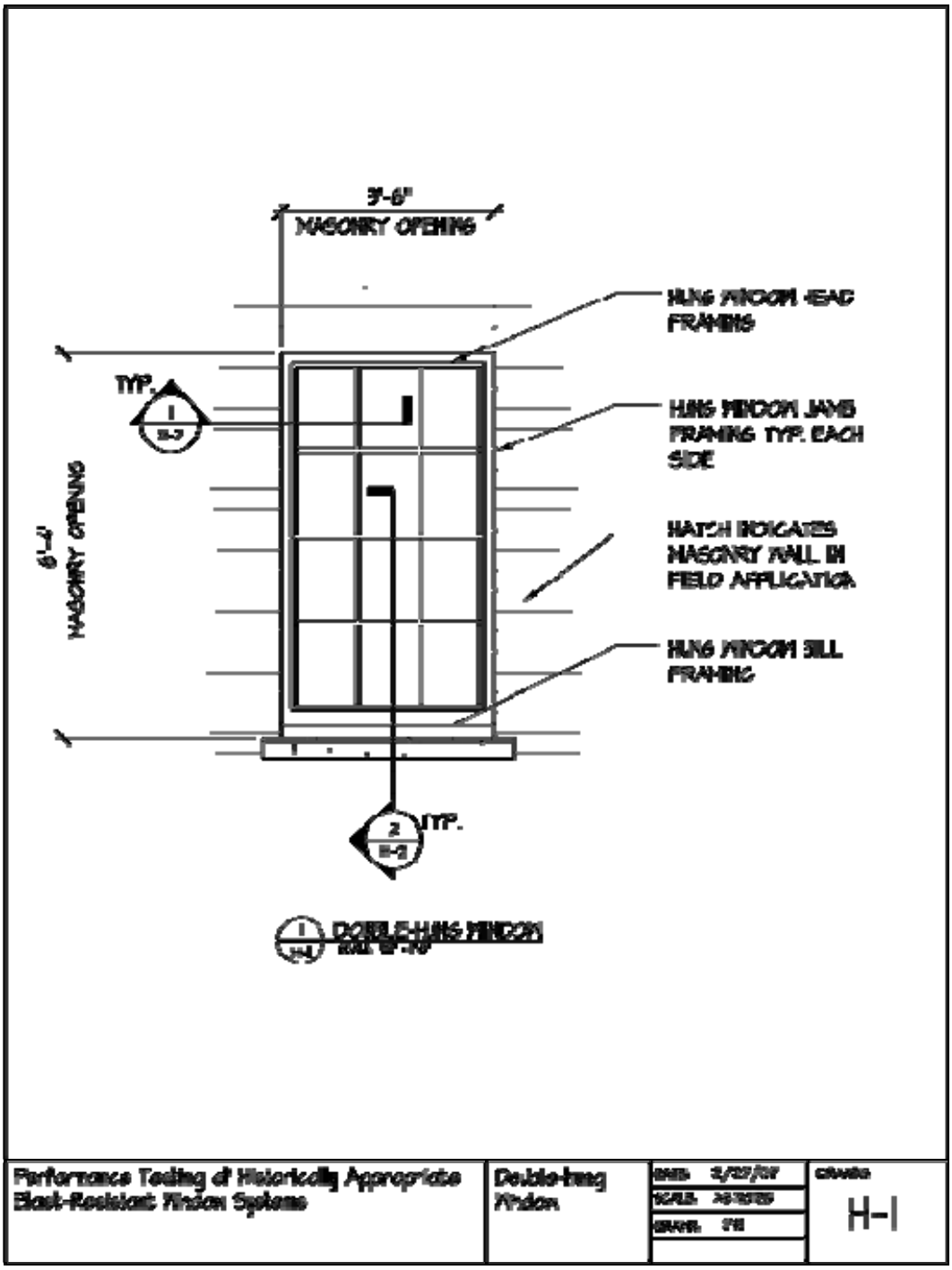

Figure 6.1. Elevation of representative historic double-hung window unit in a 3 ft 6 in. by 6 ft 4in. brick masonry opening.

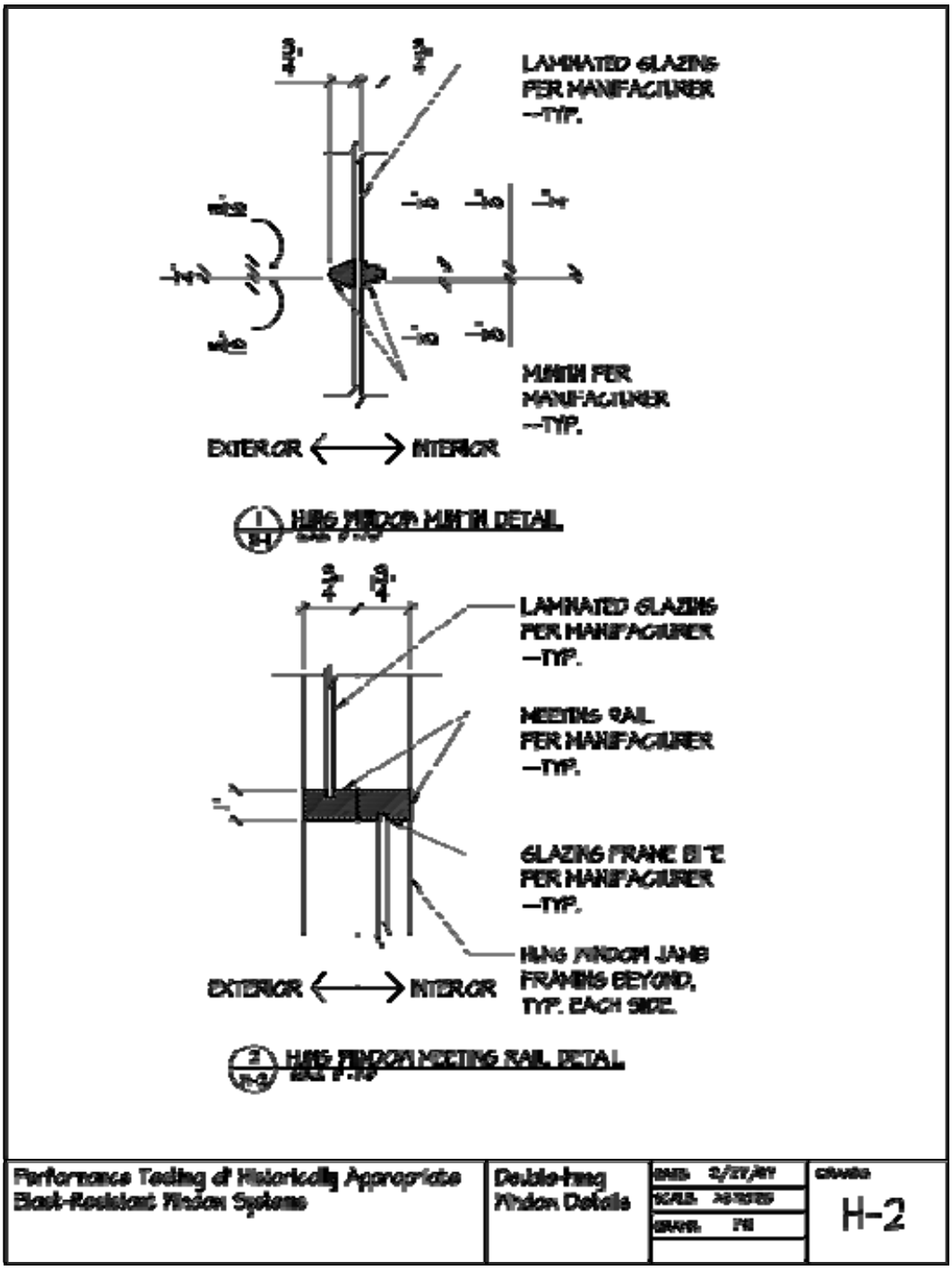

Figure 6.2. Muntin and meeting rail details for representative historic double-hung window unit.

Factory-type window

As noted previously, U.S. window manufacturers adopted the British Bessemer process around 1900, which lowered steel production costs and made hot rolled steel windows affordable. In addition to being economical,

steel window frames were fire-resistant when used with wire glass, making them especially suitable for manufacturing and industrial applications. They were also durable, standardized, and easily transportable, characteristics attractive to U.S. military construction agencies. By the early 1950s, military leaders came to view defense installations as industrial operations for a largely mechanized force. New military standardized building designs (e.g., barracks, headquarters, and classrooms) featured a utilitarian industrial aesthetic, including glazing expanses set into steel factory window framing. These buildings are now reaching the 50-year threshold for potential historic status. For this reason, factory-type window specimens were selected for this testing program (Figure 6.3, Figure 6.4, and Figure 6.5). These windows are found in several building types, but they are notably prevalent on 1950s-era military barracks of masonry construction.

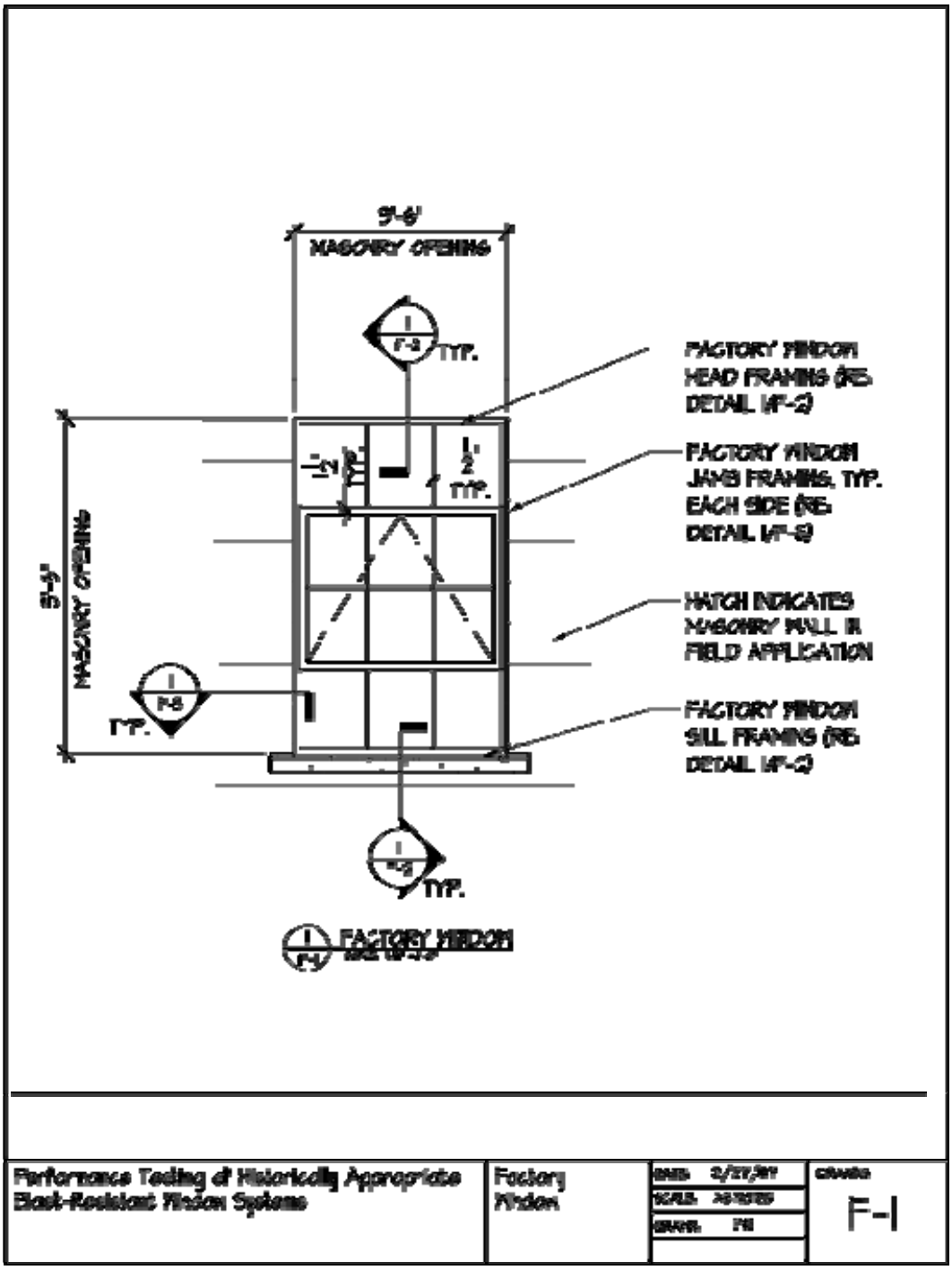

Figure 6.3. Elevation of representative historic factory window unit in a 3 ft 6 in. by 5 ft 6in. CMU opening.

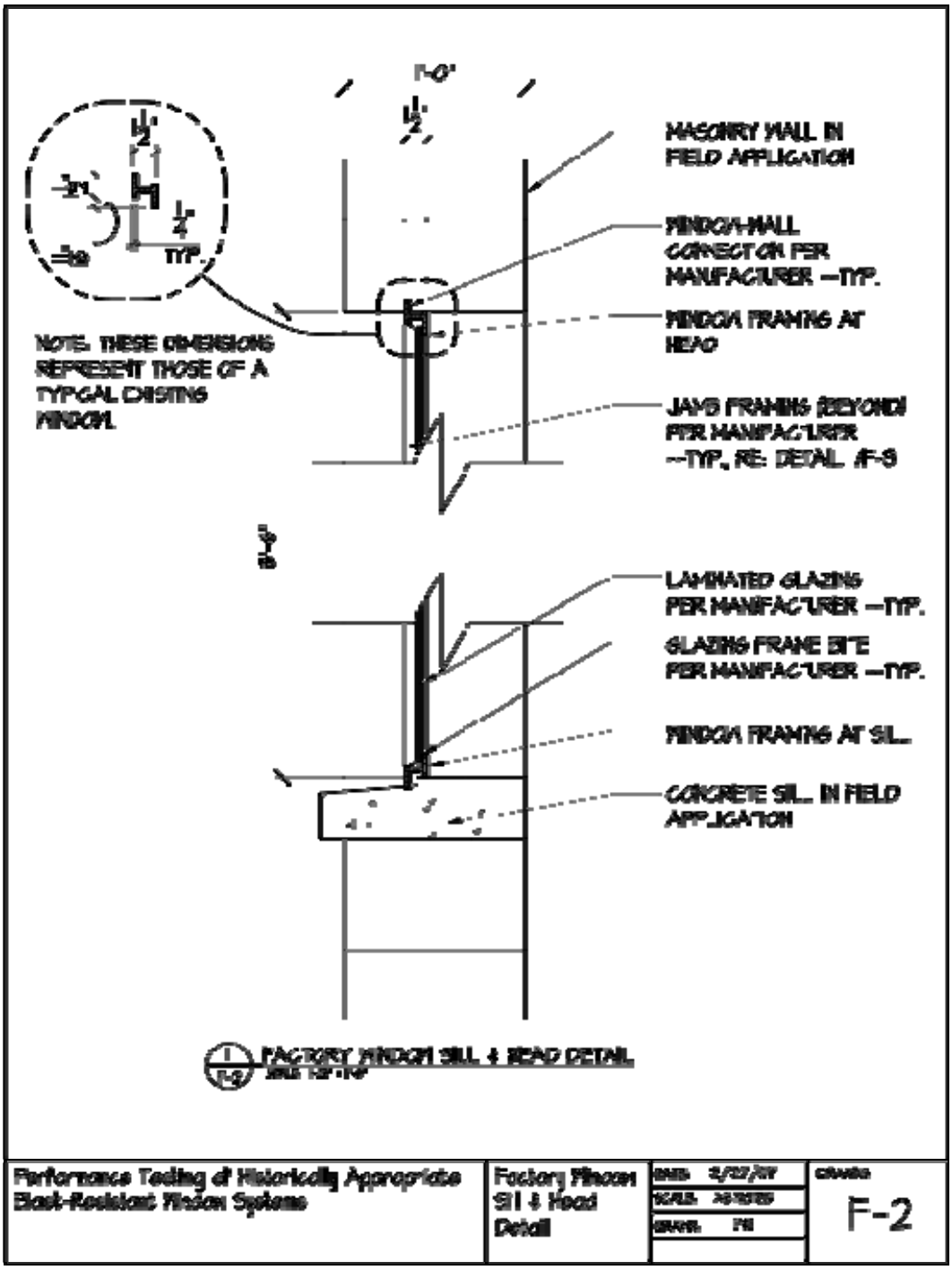

Figure 6.4. Sill and head details for representative historic factory window unit.

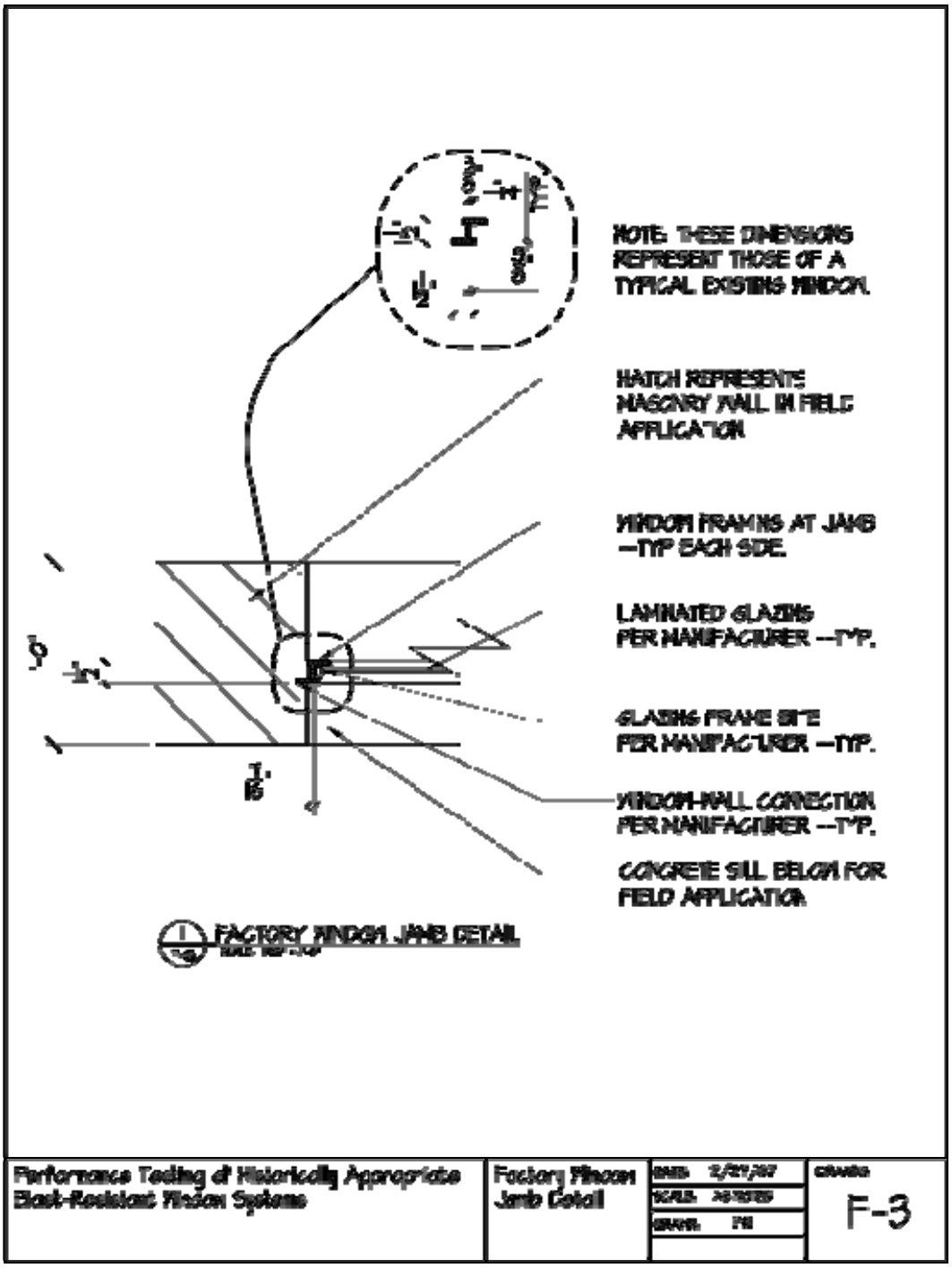

Figure 6.5. Jamb detail for representative historic factory window unit.

Assumed building and site variables

After test window types were selected, it was necessary to develop assumptions about building type, use, occupancy, and site conditions. Those variables dictated what charge weights, standoff distances, and UFC criteria to assume for testing purposes. Because two identically constructed buildings

can be categorically different for UFC 4-010-01 purposes (i.e., differing occupancies and uses), research methods no longer benefited from construction standardization.

To choose a realistic assumed standoff distance and explosive weight, special consideration was given to site configuration since boundary conditions and building standoff distances had to be representative of military historic districts. Based on an informal survey of ongoing UFC-mandated rehabilitation projects in military historic districts, typical building standoff distances were found to be comparatively small compared with newer construction. For purposes of the current testing program, a 60 ft standoff was assumed. Note that this distance does not coincide with either of the UFC-prescribed minimum standoff or conventional construction standoff, as existing buildings rarely would be positioned at those exact locations.* To partially compensate for the lack of standoff, a boundary condition of "Parking and Roadways within a Controlled Perimeter" was assumed for all testing scenarios to allow for use of the smaller, UFC-specified blast load (explosive weight II). Even this lower explosive weight creates a relatively large blast load at short distances. The 60 ft standoff and explosive weight II (in TNT equivalent) were input into the WinDAS software program to determine the pressure-impulse couple used during blast performance testing trials.

Window manufacturers and agreements

Window vendor qualification

Using research, referrals, and introductory correspondence, the research team compiled a list of blast window vendors thought to have manufacturing capabilities and products suitable for historic building applications. Companies identified as meeting the general requirements of this research (see Appendix B) were invited to pre-qualify for participation in the testing program by completing a prequalification worksheet. Categories of information collected in the prequalification worksheet are shown in Table 6.1 below.

* Most DoD blast testing to date has been done using conventional construction standoff distances.

Table 6.1. Information collected in the prequalification worksheet.

Point of contact information	Basic information on products offered for testing	Window manufacturer/product testing program requirements
Company name	Narrative description of product	Familiarity with ASTM F1642
Company address	Prior testing data	Ability to produce historically compatible window specimens
Company website	Threat environments product is effective against	Ability to donate window specimens
Company POC	Installation requirements	Ability to produce specified window size & type
POC Tel number	Performance characteristics	Ability to produce windows to withstand specified dynamic blast load
POC Fax number	Material properties	Ability to fabricate window according to program schedule
POC E-mail address	Engineering properties	Ability to transport window specimen to test site
	Projected cost for windows	Availability and ability to install window specimens at test site
		Willingness to sign any required releases or agreements

The intent of the prequalification worksheet was to (1) gauge interest in a Windows-in-Exchange-for-Test-Data program, (2) give window manufacturers an opportunity to participate, (3) provide these companies with preliminary testing parameters to calculate an approximate return on investment for program participation, and (4) allow nonparticipating companies to submit product and manufacturing capability information for the technical report vendor directory. Manufacturers were invited to offer a number of window products for testing that met the preliminary specifications for two window types with historic profiles as noted previously. Two confirmed, qualified test program participants were selected and subsequently received additional detailed window specifications set forth in their respective Cooperative Research and Development Agreements.

Cooperative Research and Development Agreements (CRADAs)

Cooperative Research and Development Agreements (CRADAs) were developed for each participating window manufacturer. CRADAs fall under the authority of the Cooperative Research and Development Agreement Section of the Federal Technology Transfer Act of 1986 [Public Law 99-502, 20 October 1986, (100 Stat. 1785, 15 U.S.C. §3710a)]. For purposes of

this research, the CRADAs were used to establish roles and responsibilities between the window manufacturer (the provider) and ERDC-CERL (the recipient); the primary purpose was to temporarily transfer window test specimens to ERDC-CERL for blast testing. They include equipment schedules for describing the transferred material, material value, service location of the material (i.e., test site), and provisions for return or disposal of the material. Upon signature of the CRADAs, participating window manufacturers provided ERDC-CERL with window shop drawings based on specifications outlined in the CRADAs (see *Window type selection* on page 66).

Test facilities and testing trials

Blast test facility qualification and acquisition

Using research and referrals, the research team generated a list of blast test facilities in the United States thought to have capabilities appropriate for this testing program. Those facilities identified as potential candidates were invited to bid on the contract through the FedBizOpps.gov website. The contract was awarded to the lowest qualified bidder.

To be considered, blast test facilities were required to have a minimum of five successfully completed testing projects in the past two years, accommodate the project schedule and window vendor fabrication schedules, and demonstrate their qualifications with submission of their bids. The most important requirement was to have a testing facility meeting the requirements of ASTM F1642 para 8.1, either a shock tube or open-air arena, from which to generate airblast loading. Specific facility requirements included:

- (Open-air arenas only) Be sited on clear and level terrain and be of sufficient size to accommodate detonation of the required amount of explosives to provide the desired peak positive pressure and positive phase impulse.
- Have a reaction structure large enough to accommodate single- or double-hung window system specimens measuring 3’6” by 6’4” and factory/industrial window system specimens measuring 3’6” by 5’6”.
- Have ability to generate the specified pressure and impulse in compliance with ASTM F1642 para 8.2 (and para 8.3 as necessary).
- Have ability to satisfy the minimum instrumentation and reporting requirements set forth in ASTM F1642 para 8.7, 11.1, and 12.

Due to the relatively small number of testing trials in this program, high startup costs (e.g., transport of materials and construction of reaction structures), and the possibility of inclement weather that could impact testing schedules, it was not considered economical or practical to conduct tests in an open-air arena. Therefore, a shock tube test facility was sought and selected. A directory of known test facilities is available in Appendix B.

Blast test facility investigation plan and implementation

Prior to testing, the selected test facility was required to provide an *investigation plan* that detailed how the tests were to be carried out. This plan included administrative details, testing methodology and protocol, instrumentation and reaction structure details, and post-test reporting. Testing was executed according to this plan.

Testing methodology

Window specimens were tested in accordance with ASTM F1642 against the specified pressure and impulse. These load parameters were to be met within minus 5% on either parameter or a combination of the parameters (a typical allowance). The actual pressure and impulse readings exceeded the specified parameters marginally and so were considered valid. The intent was to provide a UFC 4-010-01 “low” level of protection and the associated ASTM F1642 “very low hazard” rating.

Blast loads were applied using a shock tube (Figure 6.6) that generated shockwaves with the sudden release of a compressed air-helium mixture created by diaphragm bursts. Diaphragms were made of two sheets of 0.30 mm aluminum. Shockwaves traveled down the shock tube and were applied to the test specimens mounted in an enclosure (i.e., reaction structure) attached to the end of the shock tube. A single space of approximately 6 in. between shock tube segments simulated negative phase pressures commonly not accounted for in shock tube testing (Figure 6.7).

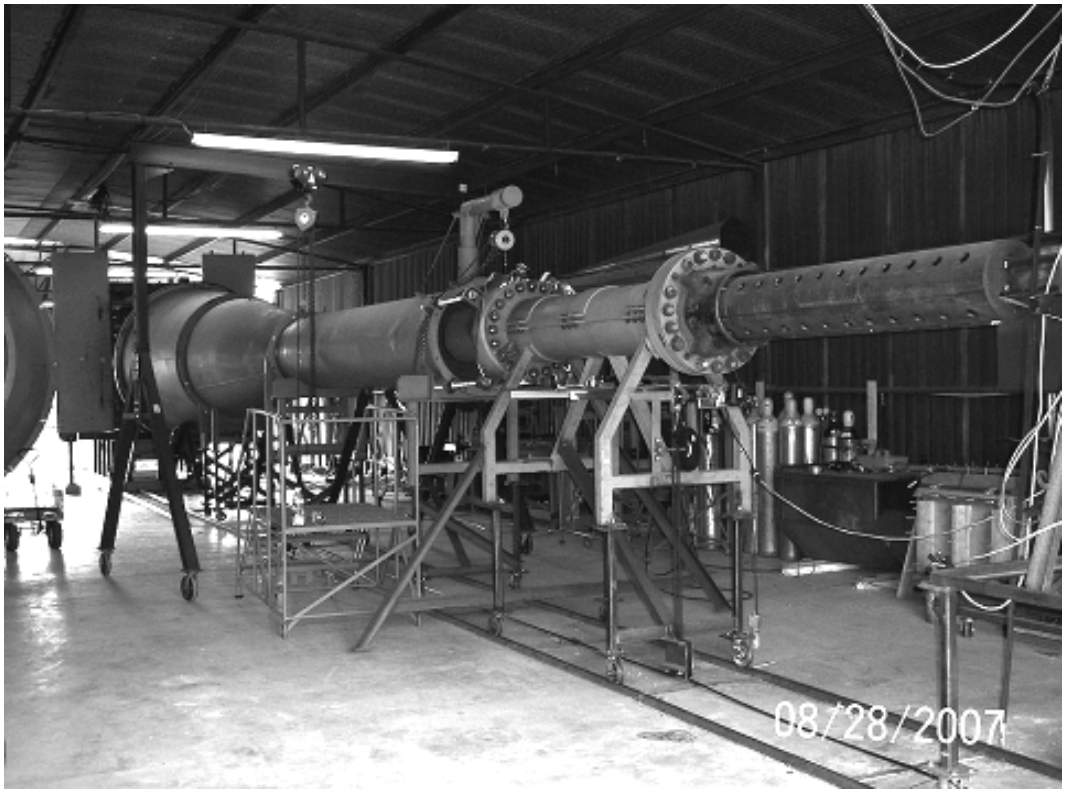

Figure 6.6. Shock tube used in this testing program (PDC 2007).

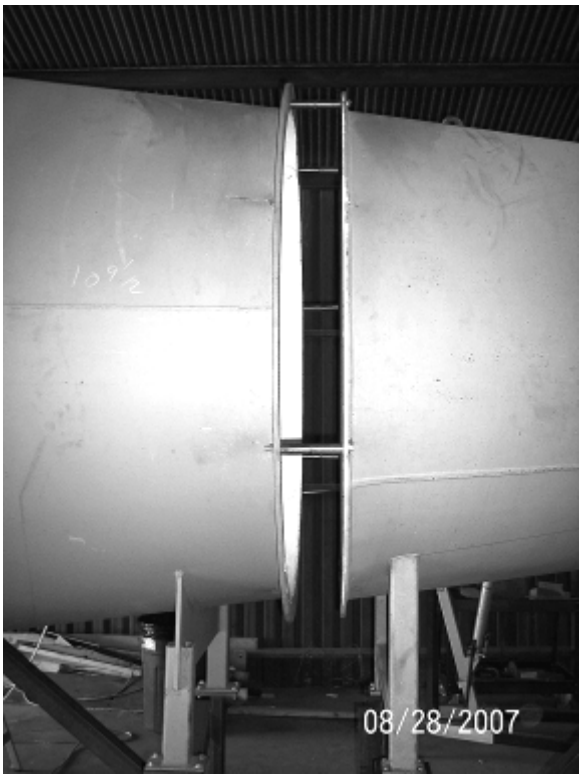

Figure 6.7. Gap in shock tube used to simulate negative phase pressures (PDC 2007).

The reaction structure was ASTM F1642-compliant, and measured 120 in. deep x 53 in. wide by 97 in. high (Figure 6.8). It could accommodate a maximum window height of 84 in. (7 ft). Although the facility could fit multiple windows in the reaction structure, only one window was tested at a time due to the complexity of analyzing individual reactions of multiple windows under chaotic blast conditions.

Figure 6.8. Shock tube side of the reaction structure (PDC 2007).

Blast pressure gauges were installed on the front face of the reaction structure at the sides and top of the window. Data were recorded on a digital oscilloscope and waveforms were converted to pressure-time histories in DPlot format for each gauge. Window surface and ambient temperatures were recorded for each test.

Installing the window specimens

ASTM F1642 provides for various framing and anchoring options in the testing of window specimens. The most realistic and costly option is testing in a framing system identical to that of the field application. Because the windows tested in this program were not intended for use in a specific building, it was decided that:

- they would be mounted either directly into the primary test frame provided by the test facility or into an inner sub-frame (known as a test buck) that attaches to the primary test frame, provided by the window manufacturer;
- there was no need to validate application-specific anchorage arrangements; and
- the fourth specimen required by ASTM F1642 for purposes of verifying cross-sectional properties and thicknesses was not required.

It is possible to support the window specimens in the primary (external-most) test frame in a variety of ways using 'sandwich angles.' Framing alternatives included: (1) support on two sides at top and bottom, (2) support on two sides at right and left sides, (3) support on all four sides, or (4) support in a test buck into which the window specimen is anchored. This last alternative allows for testing of types, numbers, and spacing of anchors.

Although anchorage analysis was not part of this test program, the participating window manufacturers chose to mount each of their three identical window specimens in a test buck for testing trials (Figure 6.9). This precluded the need for onsite anchorage of window specimens into the reaction structure.

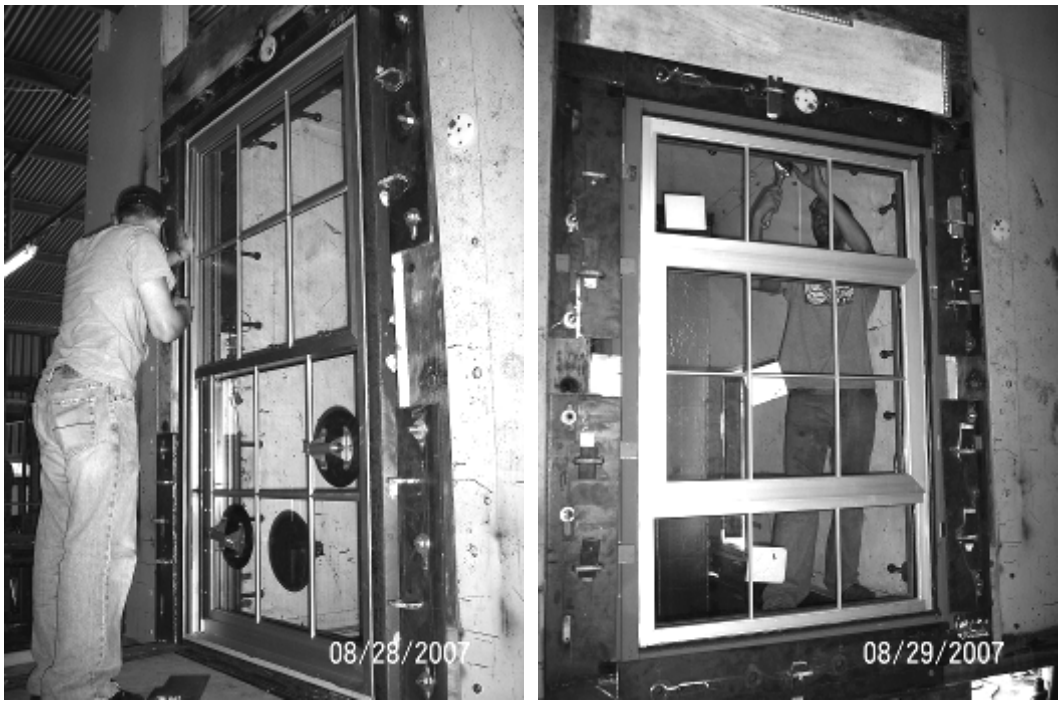

Figure 6.9. Hung window specimen (left) and factory window specimen (right) installed in the reaction structure (PDC 2007).

Documentation

Upon completion of testing, the blast test facility reported the results for each window specimen in accordance with ASTM F1642 para 12, including a description of specimens and test framing, number of specimens per window type tested, ambient temperature, glazing temperature, peak positive pressure (P), positive phase duration (td), positive phase impulse (i), airblast pressure history from transducers, specimen post-test condition (including any frame deflections), witness panel damage, specimen status (i.e., ASTM hazard level rating), and photographic record of test set-ups and test specimens pre- and post-test. High-speed video documentation was not provided.

Tests were carried out in accordance with the above investigation plan. Copies of the ASTM-compliant blast test reports are in Volume 2 of this report, which is an appendix authorized for distribution only to U.S. government agencies.

7 Conclusions and Recommendations

Conclusions

Testing program summary

Rather than being project-specific, this research and testing program centered around two prevalent historic window profiles — hung and factory windows — found in many standard historic military buildings. Because the testing addressed no specific rehabilitation project, it was necessary to assume a range of test variables for window prototype development. The test program process and design assumptions are outlined in Table 7.1.

Table 7.1. Summary of test program process.

Test program tasks	Hung window factors, assumptions & conclusions	Factory window factors, assumptions & conclusions
1. Established which existing window units were to comply with UFC 4-010-10.		
Determined existing window size, frame composition, type/operability & host building type.	3'-6" x 6'-4" wood-framed operable double-hung unit in a brick masonry building.	3'-6" x 5-6" steel-framed awning-operable factory-type unit in a CMU building.
Determined whether retrofitting existing windows for blast-resistance was an option.	No, complete window replacement was chosen as the research focus.	No, complete window replacement was chosen as the research focus.
2. Performed historic preservation assessments of the NRHP-eligible buildings, including windows.		
Determined period of original window construction & identified character-defining historic window attributes to be replicated.*	19th-century 6-over-6-lite wood double-hung window (see Figure 6.1 & Figure 6.2).	1950s 12-lite steel factory window with 6-lite operable awning sash (see Figure 6.3, Figure 6.4 & Figure 6.5).

* Since virtually all window replacements would constitute an NHPA Section 106 undertaking, consider mitigation appropriate to the specific project. This could include HABS documentation, salvage of historic window units, interior secondary blast windows on a similar representative building, etc.

Test program tasks	Hung window factors, assumptions & conclusions	Factory window factors, assumptions & conclusions
Set design requirements for replacement units that satisfy SOI rehabilitation standards 9 (compatible new additions) & 10 (reversible new additions).	(3) identical operable single- or double-hung windows for placement in a 3 ft 6 in. by 6 ft 4 in. masonry opening; specimens were to match as closely as possible the 6-over-6-lite window configuration & profile depicted in the Existing Conditions Drawings; alternate materials & modes of operability were allowed.	(3) identical factory/industrial windows for placement in a 3 ft 6 in. by 5 ft 6 in. masonry opening; specimens were to match as closely as possible the 12-lite window configuration & profile (including the 6-lite inset) depicted in the Existing Conditions Drawings; alternate materials & modes of operability were allowed.
3. Established site-specific & building-specific variables for UFC 4-010-01 pre-design consideration.		
Set building use & UFC-defined building category.	Administration; primary gathering.	Barracks; billeting.
Determined UFC-required level of protection & associated ASTM hazard rating.	Low level of protection; very low hazard rating.	Low level of protection; very low hazard rating.
Established type & location of explosive device (e.g., within or outside a controlled perimeter).	Vehicle bomb; at parking & roadways within a controlled perimeter.	Vehicle bomb; at parking & roadways within a controlled perimeter.
Determined actual standoff distance & compared it to minimum & conventional construction standoff distances.*	60 ft; between minimum & conventional construction standoff distances (33 & 82 ft).	60 ft; between minimum & conventional construction standoff distances (33 & 82 ft).
Determined whether operational alternatives, real estate acquisition, building portions as standoff, etc. were feasible to increase actual standoff distance.	No alternatives assumed.	No alternatives assumed.
Determined explosive charge weight.†	Charge weight II.	Charge weight II.
4. Selected UFC 4-010-01 window design approach (i.e., prescriptive or performance-based).		
Decided whether to follow a prescriptive or performance-based design approach for window design.	Performance-based design through live blast testing per UFC B-3.1.5.	Performance-based design through live blast testing per UFC B-3.1.5.

* Rarely would an existing building be at exactly the minimum or conventional construction standoff distance.

† See UFC 4-010-02 (FOUO) for actual charge weights.

Test program tasks	Hung window factors, assumptions & conclusions	Factory window factors, assumptions & conclusions
Determined design parameters peak positive pressure (p) & impulse (i) using actual standoff distance, charge weight & WinDAS software.	See Volume 2.	See Volume 2.
5. Contracted the services of a blast test facility for live blast testing & entered into CRADAs with window manufacturers to construct prototype windows (see Appendix B).		
6. Evaluated window specimen performance & construction.		
Examined window construction for 36 CFR Part 67 (SOI rehabilitation standards) conformity.	Conformed.	Did not conform.
Substantiated that window performance afforded appropriate level of protection at design pressure & impulse per UFC 4-010-01.	Exceeded low level of protection (medium).	Exceeded low level of protection (medium).

Blast performance results

As stated in "Testing methodology," window specimens were tested in accordance with ASTM F1642 against the specified pressure and impulse parameters. Testing loads exceeded these parameters and therefore were considered valid.

The three hung windows were tested on Day 1 of airblast testing (Tests 1 – 3).* Each test documented a greater level of protection than required by the testing program. One instrumentation anomaly occurred during Test 1: pressure and impulse values were recorded accurately by the pressure transducers, but the time-pressure histories were not saved to a permanent file. This was due to instrumentation unintentionally being set to "auto-trigger." The setting was corrected prior to the start of Test 2.

The three factory-type windows were tested on Day 2 of airblast testing (Tests 4 – 6). Test 5 was attempted a total of three times; the first two attempts were void because the pressure and impulse parameters were not met within minus 5% tolerance, as required by the testing program. This error was caused by the diaphragm bursting too early, thus not allowing enough pressure to build behind the diaphragm. It was determined that

* In order to comply with the operability requirements of this testing program, custodial locks installed on the hung window specimens were disabled during airblast testing.

the aluminum used for the diaphragm was the problem, so it was replaced.* Because the Test 5 window specimen was not heavily damaged during the voided testing attempts, it was retested until it finally tested successfully (third trial, Test 5B). A second instrumentation anomaly occurred during Test 6: the Gauge 3 pressure transducer did not record, so input from Gauges 1 and 2 was used to calculate data averages.

Ultimately the goal was to produce windows that provided a UFC 4-010-01 "low" level of protection and the associated ASTM F1642 "very low hazard" rating. Each of the valid tests documented a greater level of protection than required by the testing program. A summary of the results for all tests is shown in Table 7.2.

Table 7.2. Summary of all airblast testing trials.

Test No.	Window type	ASTM hazard rating (UFC level of protection)	Description of glass breakage	Pass/Fail per ASTM F1642
1	Double-hung	Minimal (Medium)	No perforations, dusting	Pass
2	Double-hung	Minimal (Medium)	No perforations, dusting	Pass
3	Double-hung	Minimal (Medium)	1-1/4" perforation, dusting	Pass
4	Factory-type	Minimal (Medium)	No perforations, 1 sliver, dusting, no break on fixed lites	Pass
5	Factory-type	N/A	No break either lite - burst low	Void
5A	Factory-type	N/A	No break inner lite - burst low	Void
5B	Factory-type	Minimal (Medium)	No perforations, dusting	Pass
6	Factory-type	Minimal (Medium)	No perforations, dusting	Pass

Detailed ASTM-compliant reports for each testing trial are provided in Volume 2 of this report, an appendix for which distribution is authorized only to U.S. government agencies.

* Aluminum for diaphragms is cut from spools to fit the shock tube. Between Tests 4 and 5, it was necessary to change out rolls of aluminum. The second roll was not as strong as the first roll; furthermore, equipment was calibrated for the first roll. Additional aluminum from the roll used for prior successful tests was found and used for subsequent tests. If this additional aluminum was not found, it would have been possible to temporarily support the weaker diaphragm by filling a chamber in front of it with compressed air. This front chamber would have been depressurized after the rear chamber filled to the specified pressure.

Historic preservation performance results

Differences between historic windows and their replacement blast units were inevitable. The material and design tradeoffs necessary for UFC 4-010-01 compliance can have historic preservation implications. Table 7.3 compares the design characteristics of the historic windows and the replacement units provided by the participating window manufacturers.

Table 7.3. Window characteristics used to evaluate historic preservation performance.

Window characteristics	Historic hung	Hung replacement	Historic factory	Factory replacement
Assumed supporting structure.	Brick masonry wall with 3'6" wide x 6'4" tall masonry opening.	(same)	CMU masonry wall with 3'6" wide x 5'6" tall masonry opening.	(same)
Window configuration and type.	6-over-6-lite hung window.	(same)	12-lite factory window with 6-lite awning inset.	(same)
Materials.	Wood.	Extruded aluminum.	Steel.	Extruded aluminum.
Modes of operability.	Hung.	(same, with patented Self Balance technology)	Fixed with operable awning sash.	(same)
Overall dimensions (in.).	Slightly less than 42 in. x 76 in. to fit masonry opening.	41.5 in. x 75.5 in.	Slightly less than 42 in. wide x 66 in. tall.	42 in. x 66 in.
Vertical sash dimensions (in.).	2 in. (both sides).	2-7/8 in. (both).	1-1/2 in. (both sides).	2-1/16 in. (both sides).
Horizontal sash dimensions (in.).	2 in. (top); 3 in. (bottom).	2-7/8 in. (top); 3-7/8 in. (bottom).	1-1/2 in. (top and bottom).	2-1/16 in. (top and bottom).
Meeting rail dimensions (in.).	1 in. wide.	1-3/4 in.	For awning sash: 1-1/2 in. (top and bottom); 3 in. (both sides).	For awning sash: 3-15/16 in. (top and bottom); 3.5 in. (both sides)
Muntin dimensions (in.).	7/8 in. wide x 3/4 in. deep.	7/8 in. wide x 3/8 in. deep.	1/2 in. wide.	9/16 in.

Window characteristics	Historic hung	Hung replacement	Historic factory	Factory replacement
Muntin types.	True structural.	Nonstructural applied grille (fixed to glazing with sealant); Grille fluting used to compensate for reduced muntin depth.	True structural.	Nonstructural applied grille (not fixed to glazing).
Glazing type.	Single-layer annealed; No tints, coatings, or thickness specified.	1 in. insulated laminated [¼ in. annealed outboard + ½ in. airspace + ¼ in. laminated outboard (0.06 interlayer)].	Single-layer annealed; No tints, coatings, or thickness specified.	1 in. insulated laminated [¼ in. annealed outboard + ½ in. airspace + ¼ in. laminated outboard (0.06 interlayer)].
Glazing area.	Based on overall window dimensions.	Slightly reduced overall.	Based on overall window dimensions.	Slightly reduced overall; greatly reduced at awning sash.
Historic preservation results.	n/a	PASS; overly shallow muntin depth.*	n/a	FAIL; overall dimensions matched masonry opening size exactly so unit did not fit; unsightly oversized horizontal framing members at awning sash; framing members had overly flat profiles.†

As the table shows, the most common SOI standards nonconformities were the use of alternate materials and oversized framing members. The change in material was necessary in the hung window but not needed for the factory unit, which could have been replicated in its native steel. The robust, oversized window framing members needed to constrain glazing under blast pressure reduced the overall vision area of these windows. Generally, any profile, shadowline, and sightline differences were acceptable and produced no significant visual incongruities at a distance, with the exception of the horizontal framing elements of the factory window operable awning sashes. Those framing members measured more than double the dimensions specified and were a major contributor to the "Fail"

* A minor SOI standards nonconformity in the hung windows was a shallow grille. The manufacturer offered researchers the option to increase grille depth, which would also decrease the overall depth of the IGU assembly. To preserve energy efficiency characteristics of the windows, researchers opted for grille 'fluting', a design trick used to give the illusion of increased depth.

† According to the factory window manufacturer, it may be possible to reduce the oversized horizontal framing members of the awning sash by approximately 1/2 in.

rating for historic preservation. One alternative approach, but a more costly one, would have been to construct the factory window of steel to keep framing elements slimmer. Another approach would have been to construct the entire frame of extruded aluminum, but with the entire window assembly functioning as an awning unit. This design could have included a strong upper hinge and low center crank or stay bar for operability; and muntin and awning inset details could have been represented in nonstructural grilles, thus emulating historic sightlines more accurately. Furthermore, all factory window framing elements had overly flat profiles that created an institutional rather than industrial aesthetic.

Window and testing costs

Typical blast resistant window costs

As part of the prequalification process, prospective manufacturers were asked to provide estimated cost data for their donated window specimens. The projected cost for double-hung blast resistant replacement windows ranged from $45 – $81 per square foot ($/sf). The projected cost for factory-type replacement windows ranged from $44 – $80/sf. These figures are for windows constructed of extruded aluminum frames and insulated glass, and include installation.*,†

As shown above, the estimated per-square-foot costs range widely from manufacturer to manufacturer. Interestingly, these figures do not vary markedly from the average cost of less expensive blast resistant windows in non-historic configurations, approximately $50/sf (Conrath interview, April 2006). This may be due in part to vendors who are just now beginning to offer standard product lines for historic building applications.

It should be noted that the cost figures cited above reflect first-costs only, not life-cycle costs associated with maintenance expenditures or energy savings realized by utilizing IGUs. In addition, the figures are based on unit costs (i.e., the cost of a single window installed). Cost savings realized from economies of scale associated with the purchase of multiple windows were not estimated. Furthermore, the price of windows, whether blast-

* For comparison, muntin array window systems can cost upwards of $150-$160/sf installed (Conrath interview, April 2006).

† For comparison, conventional aluminum windows cost between $12/sf and $33/sf (Moselle 2007, RSMeans, 2002); conventional steel units cost between $52/sf and $63/sf (RSMeans, 2002).

resistant or conventional, can vary considerably depending on size, style, finish, quantity purchased, and other factors.

Typical blast testing costs

For the six live blast tests in this testing program, the fixed costs were approximately $20,000. These 'startup' costs included such items as construction of a reaction structure; material cleanup and disposal; high-speed digital still photography; test data generation, analysis, and reporting; and labor and administrative fees. In addition to the fixed costs, some shock tube facilities charge additional fees per test, while others charge a flat fee for each day of testing at the facility. Based on information collected under this research program, per-test additional costs ranged from $1,500 – $8,000. The total costs quoted for shock tube testing ranged from $4,500 – $10,000 per live blast test.

Open-air arena tests typically have more fixed costs than shock tube tests. These can include fees for transportation of materials and personnel to a remote test site, safety provisions, explosives and detonations, and site reconditioning. As would be expected, these added fees result in larger startup costs relative to shock tube testing. However, many open air arenas can subject large numbers of windows in multiple reaction structures to a single detonation, thus offering an economy of scale suitable for large testing programs. Under this small testing program, the total cost quoted for open air arena testing ranged from $10,000 – $50,000 per live blast test.

A summary of approximate costs associated with both types of testing venues are listed in Table 7.4.

Table 7.4. Summary of test facility costs.

Facility Type	Start up/fixed costs (approximate)	Per test additional costs (approximate)	Average total cost per live blast test (approximate)**
Shock tube	$5,000 - $20,000	$1,500 - $8,000	$4,500 - $10,000
Open air arena	$25,000 - $60,000	$5,000 - $40,000	$10,000 - $50,000

* Figures are based on the requirement for six live blast tests under this testing program.

Recommendations

Recommendations resulting from this research include the following:

- Where warranted by the project, it is recommended that military installations include live blast testing of representative window systems in their construction and window procurement contracts. In cases where the strength of window-supporting elements is unknown, such contract provisions can include blast testing of partial representative wall assemblies.
- Now that directories of blast resistant window manufacturers and blast test facilities have been developed, and templates for CRADAs created to allow for donation of window specimens, the small testing program conducted for this investigation could readily be expanded to cover more window vendors and historic window types.* Further testing can yield additional valuable performance data for blast-resistant windows in various historic configurations for which little data have been developed.
- Testing of aged blast resistant window systems can yield data on how the material and performance characteristics of such products change over time. Similarly, testing of blast resistant windows under extreme climatic conditions can yield regional data on material and performance characteristics. Furthermore, data from any additional testing can be used to refine analysis and modeling software used by the protective design community.
- The compilation of additional blast resistant window cost data that differentiates unit from bulk cost, installed from uninstalled price, and single panes from IGUs for a variety of window configurations would be useful for procurement agents.

* Response to the window manufacturer solicitation under this research was exceptional and only vendors with outstanding prequalification worksheet and product brochure submittals participated in testing. Many more window specimens were offered by vendors than could be utilized by this testing program.

References

16 USC 470, National Historic Preservation Act of 1966 (as amended).

36 CFR 67, Secretary of the Interior's Standards for Rehabilitation. Department of the Interior, National Park Service.

Architectural Record. Vinyl by Design: A Proven Material in the Built Environment. AIA Continuing Education Series, July 2000.

ASTM Standard C1564-04, Standard Guide for Use of Structural Sealant for Protective Glazing Systems.

ASTM Standard E1300-04e1, Standard Practice for Determining Load Resistance of Glass in Buildings.

ASTM Standard F1642-04, Standard Test Method for Glazing and Glazing Systems Subject to Airblast Loadings.

ASTM Standard F2248-03, Standard Practice for Specifying an Equivalent 3-Second Duration Design Loading for Blast Resistant Glazing Fabricated with Laminated Glass.

Clement, Peter. Metal Windows. The Building Conservation Directory. 1997. http://www.buildingconservation.com/articles/metalwin/metalw.htm

Conrath, Edward J. Multi-Hazard Window (Glazing) Design [unpublished], no date.

Covering Your Glass, Adhesives Age, March 2002, www.adhesiveage.com.

Crawford, John E., Daniele Pelessone, David D. Bogosian, and Anthony A. Ronca. Retrofits for Existing Windows to Protect Occupants from Injurious Debris Due to a Bombing, Presented at 71st Shock & Vibration Symposium, Arlington, Virginia, November 2000.

Facy, Eric. At Close Range, Blast Requirements are Increasing: Are You Prepared? U.S. Glass. Volume 39, Issue 1, January 2004.

General Services Administration, US General Services Administration Standard Test Method for Glazing and Window Systems Subjected to Dynamic Overpressure Loadings, January 1, 2003.

Graham Architectural Products website. http://www.grahamwindows.com/blast/bm_3400.html

Harpole, Tom. Shattered: Blast Tests Come Under Fire, Facilities Design and Management, Volume 20, Number 10, pp 60-62, Oct/Nov 2001.

Hays, Ken. Protection at Any Price?: A Discussion About Blast Resistant Windows, Design-Build Dateline, September 2004.

Hays, Ken. The Big Bang. Understanding the Composition of Elements of Blast-Resistant Systems. U.S. Glass. Volume 38, Issue 6, June 2003.

Hinman, Eve. "Blast Safety of the Building Envelope," Whole Building Design Guide, National Institute of Building Sciences, 2005. http://www.wbdg.org/design/env_blast.php?print=1, accessed 7 April 2006.

Interagency Security Committee (ISC), ISC Security Design Criteria for New Federal Office Buildings and Major Renovation Projects, May 28, 2001, For Official Use Only (FOUO).

International Window Film Association (IWFA), Safety/Security Window Film. Martinsville, VA. 1999.

Lin, Lorraine H., Eve Hinman, Hollice F. Stone and Allison M. Roberts. Survey of Window Retrofit Solutions for Blast Mitigation, Special Issue on Blast Mitigation and Design against Terrorism, Journal of Performance of Constructed Facilities, p.86-94 (May 2004).

Moselle, Ben. National Home Improvement Estimator online (Craftsman Book Company, 2007). Accessed 22 August 2007. www.get-a-quote.net

North American Fenestration Standard. Standard/Specification for windows, doors, and unit skylights. AAMA/WDMA/CSA 101/I.S.2/A440-05 (2005).

Norville, Scott H., and Edward J. Conrath. Considerations for Blast-Resistant Glazing Design, Journal of Architectural Engineering, p.80-86 (September 2001).

Norville, Scott H., Natalie Harville, Edward J. Conrath, Sheryll Shariat, and Sue Mallonee. Glass-Related Injuries in Oklahoma City Bombing, Journal of Performance of Constructed Facilities, p.50-56 (May 1999).

Park, Sharon C. The Repair and Thermal Upgrading of Historic Steel Windows. Preservation Brief 13. Technical Preservation Services, Heritage Preservation Services Division, National Park Service (Washington, D C, September 1984).

Piper, James. Avoiding Common Window and Window Film Mistakes, Building Operating Management. 51, 10, pg. 80, Oct. 2004.

RSMeans. Repair & Remodeling Cost Data, 23rd Annual Edition (Kingston, MA, 2002).

Smith, Joseph, and Nancy Renfroe, "Glazing Hazard Mitigation," Whole Building Design Guide (National Institute of Building Sciences, 2005), http://www.wbdg.org/design/glazingmitigation.php, accessed 24 August 2005.

Smith, Joseph L. Anti-Terrorism: Criteria, Tools & Technology, Design-Build Dateline, February 19, 2003.

Smith, Peter D., and Tim A. Rose, "Blast Loading and Building Robustness," Progress in Structural Engineering and Materials, 4, p 213-223 (May 2002).

Stone, Hollice. Forcible Entry Demonstrations: Air-blast Resistant Window Systems (GSA, 10 July 2003).

Sunshine, Douglas., Ali Amini, and Mark Swanson. Overview of Simplified Methods and Research for Blast Analysis. Journal of Structural Engineering (2004).

United Facilities Criteria (UFC) 4-010-01, DoD Minimum Antiterrorism Criteria for Buildings, Jan 2007.

Unified Facilities Criteria (UFC) 4-010-02, DoD Minimum Antiterrorism Standoff Distances for Buildings, (For Official Use Only (FOUO)).

United States Army Corps of Engineers, Protective Design Center. Window Fragment Hazard Level Analysis (HAZL), Omaha, Nebraska. March 2002.

United States Army Corps of Engineers, Protective Design Center. Window Design and Analysis Software (WinDAS), version 2.5, Omaha, Nebraska. August 2001.

Ward, Steven P. Retrofitting Existing Masonry Buildings to Resist Explosions, Special Issue on Blast Mitigation and Design against Terrorism, Journal of Performance of Constructed Facilities, p.95-99 (May 2004).

Ward, Steven P. Anchoring Blast Proof Windows, Glen Burnie, Maryland. August 2005.

Vigener, Nik. Windows. Whole Building Design Guide (National Institute of Building Sciences, 2005)

Vigener, Nik, and Mark A. Brown, Glazing. Whole Building Design Guide (National Institute of Building Sciences, 2007), http://www.wbdg.org/design/env_fenestration_glz.php, accessed 3 February 2007.

Abbreviations and Acronyms

ASTM – American Society for Testing and Materials

AT – Antiterrorism

BRGD – Blast Resistant Glazing Design

CERL – Construction Engineering Research Laboratory

CFR – Code of Federal Regulations

COTS – Commercial Off The Shelf

CRADA – Cooperative Research and Development Agreement

DAS – Data Acquisition System

DENIX – Defense Environmental Information Exchange

DoD – Department of Defense

ERDC – Engineering Research and Development Center

FEM – Finite Element Method

FOUO – For Official Use Only

ft – Feet

ft/s – Feet per Second

GSA – General Services Administration

GSL – Geotechnical Structures Laboratory

HAZL – Window Fragment Hazard Level Analysis

i – positive phase impulse

IGU – Insulating Glass Unit

in. – Inch

ISC – Interagency Security Council

IWFA – International Window Film Association

L – Length

m – Meter

mm – Millimeter

msec – Millisecond

NASF – North American Fenestration Standard

NRHP – National Register of Historic Places

P – Peak Pressure

P-I – Pressure-Impulse

POC – Point of Contact

PSI – Pounds per Square Inch

psi-msec – Pounds per Square Inch per Millisecond

PVB – Polyvinyl-Butyral

SDOF – Single-Degree-of-Freedom

sf – Square Foot

SOI – Secretary of the Interior

t – Duration Time (msec)

TMD – Temperature Measuring Device

TNT – Trinitrotoluene

UFC – Unified Facilities Criteria

USC – United States Code

WinDAS – Window Design and Analysis Software

WinGARD – WINdow Glazing Analysis Response and Design

WinLAC – WINdow Lite Analysis Code

WWI – World War I

Appendix A: SOI Standards for Rehabilitation

The SOI rehabilitation standards, codified in 36 CFR 67, are design criteria applicable to historic properties that require alterations (i.e., repair and replacement of features) and additions for efficient contemporary use.

Table 7.5. Secretary of the Interior's Standards for Rehabilitation (NPS 1995).

Standard Number	Topic	Description
1	Find compatible use.	A property will be used as it was historically or be given a new use that requires minimal change to its distinctive materials, features, spaces, and spatial relationships.
2	Preserve historic character.	The historic character of a property will be retained and preserved. The removal of distinctive materials or alteration of features, spaces, and spatial relationships that characterize a property will be avoided.
3	Add no conjectural features.	Each property will be recognized as a physical record of its time, place, and use. Changes that create a false sense of historical development, such as adding conjectural features or elements from other historic properties, will not be undertaken.
4	Preserve significant changes.	Changes to a property that have acquired historic significance in their own right will be retained and preserved.
5	Preserve examples of craft.	Distinctive materials, features, finishes, and construction techniques or examples of craftsmanship that characterize a property will be preserved.
6	Repair or match features.	Deteriorated historic features will be repaired rather than replaced. Where the severity of deterioration requires replacement of a distinctive feature, the new feature will match the old in design, color, texture, and, where possible, materials. Replacement of missing features will be substantiated by documentary and physical evidence.
7	Use gentle, appropriate treatments.	Chemical or physical treatments, if appropriate, will be undertaken using the gentlest means possible. Treatments that cause damage to historic materials will not be used.
8	Preserve, mitigate archeology.	Archeological resources will be protected and preserved in place. If such resources must be disturbed, mitigation measures will be undertaken.
9	Compatible new additions.	New additions, exterior alterations, or related new construction will not destroy historic materials, features, and spatial relationships that characterize the property. The new work will be differentiated from the old and will be compatible with the historic materials, features, size, scale and proportion, and massing to protect the integrity of the property and its environment.
10	Reversible new additions.	New additions and adjacent or related new construction will be undertaken in such a manner that, if removed in the future, the essential form and integrity of the historic property and its environment would be unimpaired.

Appendix B: Directory of Blast Test Facilities and Window Manufacturers

Blast test facilities

According to company profiles, brochures, and test reports reviewed during the course of this research, the blast test facilities shown in Table have testing capabilities compliant with ASTM F1642.

Table B1. Directory of U.S. blast test facilities.

Test Facility	Venue/Detonation Type	Contact Information	POC
ABS Consulting	shock tube	14607 San Pedro Av, Suite 215, San Antonio, TX 78232	Darrell Barker (210) 495-5195 dbarker@absconsulting.com
Applied Research Associates (ARA)	open air arena (at EMRTC)	119 Monument Place, Vicksburg, MS 39180	Joe Smith (610) 638-5401 jsmith@ara.com
Baker Engineering & Risk Consultants	shock tube	3330 Oakwell Court, Suite 100, San Antonio, TX 78218-3024	Mike Lowak (210) 824-5960 Mlowak@BakerRisk.com
Defense Threat Reduction Agency (DTRA)	open air arena	8725 John J Kingman Rd, Stop 6201, Fort Belvoir, VA 22060-6201	Doug Sunshine (703) 325-1477 douglas.sunshine@dtra.mil
Energetic Materials Research & Testing Center (EMRTC) at New Mexico Tech	open air arena	801 Leroy Place, Socorro, NM 87801	Mike Stanley (505) 835-5720 mike@emrtc.nmt.edu
Englekirk Test Center at University of California-San Diego	servo controlled hydraulic blast simulator	Jacobs School of Engineering-UCSD, 9500 Gilman Dr (0403), La Jolla, CA 92093	Frieder Seible (858) 534-6237 seible@ucsd.edu

ERDC-Geotechnical Structures Laboratory (ERDC-GSL)	shock tube and open air arena (at Fort Polk or Eglin AFB)	3909 Halls Ferry Road, Vicksburg, MS 39180	Steve Lofton (610) 634-4248 Steve.C.Lofton@erdc.usace.army.mil
Hurricane Test Laboratory (HTL)	open air arena	3417 73rd St, Suite D, Lubbock, TX 79423	Steven Samuels (806) 797-2208 steven@htltest.com
National Center for Explosion Resistant Design (NCERD) at University of Missouri-Columbia	static vacuum chamber	Department of Civil & Environmental Engineering, UM-Columbia, Columbia, MO 65211	Sam Kiger (573) 882-3285 KigerS@missouri.edu
SRI International—Poulter Laboratory	shock tube and open air arena	333 Ravenswood Av, Menlo Park, CA 94025	Jim Colton (650) 859-2208 james.colton@sri.com
U.S. Air Force Research Laboratory	open air arena	139 Barnes Dr, Suite 2, Tyndall AFB, FL 32403-5323	Robert Dinan (850) 283-3605 robert.dinan@tyndall.af.mil
White Sands Missile Range (WSMR)	open air arena	CSTE-DTC-WS-BD, WSMR, NM 88002	Director, Business Development Offfice (866) 532-9767 TeamWhiteSands@oconus.army.mil

Window manufacturers

According to company profiles, brochures, test data, reports, and completed project portfolios reviewed during the course of this research, the window vendors shown in Table have manufacturing capabilities and products suitable for historic building applications.

Table B2. Directory of window manufacturers with products for historic applications.

COMPANY	CONTACT INFORMATION	POC 1	COMPANY PROFILE	PRODUCT DESCRIPTION
Action Bullet	http://www.actionbullet.com/home.html info@actionbullet.com 263 Union Boulevard West Islip, NY 11795	Brian Sweeney brian@actionbullet.com Tel: (631) 422-0888 Fax: (631) 422-4498	Designer and fabricator of bullet-resistant products including security glass, aluminum storefronts, and transaction counter systems. Also provide blast-resistant and non-bullet resistant products.	*BL350* windows consist of an aluminum frame and are designed to receive a range of glazing types. Windows are available in standard, clear anodized, bronze anodized, and white painted finishes. Special order custom color finishes are also available.
Arpal Defender	www.arpal-defender.com/ info@arpal-defender.com 1910 Cochran Road, Suite #470 Pittsburgh, PA 15220	Naham Bay, president nahamb@arpal-defender.com Tel: (703) 528-6814 Fax: (703) 995-4614	Offers solutions for building envelopes against blast, ballistics, and forced-entry. Engaged in developing, testing, and manufacturing of windows, curtain walls, and doors built to withstand these security threats.	All products are based on a patented *Energy-Absorbing System*™. This technology tends to reduce the need for heavy glazing and frames and avoids elaborate anchoring to walls even for high blast levels.
Curtain Wall Design and Consulting (CDC)	http://www.cdc-usa.com 8070 Park Lane, Suite 400 Dallas, TX 75231	James H. Larkin jlarkin@cdc-usa.com Tel: (972) 437-4200 Fax: (972) 437-4562	Consulting engineering firm with a focus on the design and engineering of curtain walls, stone veneer systems, architectural precast concrete, skylights, and aluminum panels.	
Custom Window Company	http://www.customwindow.com/ infocw@customwindow.com 2727 South Santa Fe Drive Englewood, CO 80110	Ed Bartlett Ed.bartlett@customwindow.com Tel: (303) 722-0822 Fax: (303) 722-1993	Manufacturer of extruded aluminum window systems custom designed for new construction, institutional buildings, and renovations. Main focus has been on historically accurate extruded replacement windows.	*TerroShield* blast-resistant window system available in fixed, project-out (hopper and awning), and casement configurations. Products are available in historic profiles and in a variety of finishes for renovation projects.

COMPANY	CONTACT INFORMATION	POC 1	COMPANY PROFILE	PRODUCT DESCRIPTION
EFCO	http://efcocorp.com/ contactus@efcocorp.com 100 County Road, PO Box 609 Monett, MO 65708	Randy Lyman rlyman@efcocorp.com Tel: (800) 221-4169, x1603 Fax: (417) 235-7313	Manufacturer of aluminum windows, entrances, storefront, and curtain wall systems. Company background includes everything from historical replication work to new construction.	
GE Polymershapes Insulgard	http://www.insulgard.com/blast.htm security.products@gep.ge.com 1291 Rickett Road Brighton, MI 48116	Fred Gebauer Fred.Gebauer@ge.com Tel: (616) 682-1500 Fax: (616) 682-1900	Have a range of standard products designed to resist ballistic, forced entry, and blast threats. Products include pass-throughs, windows, doors, and enclosures.	The *44/600* framing system is primarily used in bullet resisting applications, but it is also utilized for blast resistance. Compatible blast-resistant glazing systems range from 7/8” to 2-1/2” in thickness.
Glasslock	http://www.glasslock.com/ info@glasslock.com 301 Steeple Chase Drive, Suite 101 Prince Frederick, MD 20678	Scott Haddock haddock@glasslock.com Tel: (410) 535-9888, x1019 Fax: (410) 535-4753 Brian Frest brest@glasslock.com Tel: (410) 535-9898	Provides blast hazard reduction glazing solutions. Offers complete turnkey service in the use and installation of fragment retention window film, interior glazing retrofits, and replacement windows systems. Other products include solar control security film and perimeter security barriers.	*ForceDefender* protective glazing systems include primary and secondary windows (fixed or operable), with a customized finish. All systems can be design-built or retrofitted to meet architectural and structural requirements.
Graham Architectural Products	http://www.grahamarch.com/ info@grahamwindows.com 1551 Mount Rose Avenue York, PA 17403-2909	R.C. Goyal, supervisor rcgoyal@grahamwindows.com Tel: (951) 587-9700 Rick Jones rjones@grahamwindows.com Tel: (303) 506-1452	Manufactures aluminum and fiberglass architectural windows, aluminum and vinyl acoustical windows, and commercial terrace doors. Blast resistant window products are also available. They are historic preservation specialists.	*BM Series* blast mitigation products are available in casement, double hung, sliding, dual action, and fixed configurations. Models are available for new construction, retrofit, and historical renovation, with a choice of 1" to 1-3/16" specialty glazing systems.

COMPANY	CONTACT INFORMATION	POC 1	COMPANY PROFILE	PRODUCT DESCRIPTION
Hope's Steel Windows and Doors	http://www.hopeswindows.com/hopes.shtml 84 Hopkins Avenue, P.O. Box 580 Jamestown, NY 14702-0580	Brian W. Whalen bwhalen@hopeswindows.com Tel: (716) 665-5124 X224 Fax: (716) 665-3365	Manufacturer of custom steel windows, steel doors, security windows, fire-rated windows, and other architectural products.	*Liberty Series* blast-resistant steel windows are available in fixed, casement, and projected configurations. Window configurations are engineered for each specific project. Windows intended for historic applications can be custom designed and manufactured.
Kawneer North America	http://www.kawneer.com kawneer.northamerica@alcoa.com 555 Guthridge Court, Technology Park/Atlanta Norcross, GA 30092	Donnie Hunter Donnie.Hunter@alcoa.com Tel: (770) 840-6434 Fax: 770-734-1560	Manufacturer of architectural aluminum building products and systems for the commercial construction industry. Product portfolio includes entrances, framing systems, windows, and curtain walls.	*8400TL* single/double hung, *8325TL* fixed, projected, and casement, and *AA900* fixed, projected, and casement aluminum windows are available. For historical applications, exterior panning systems with interior snap trims are available.
Norshield Security Products	http://www.norshieldsecurity.com info@norshieldsecurity.com 3224 Mobile Highway Montgomery, AL 36108-4400	Gary Jones gary.jones@norshield.net Tel: (334) 286-4372 Tom Haines tom.haines@norshield.net Tel: (410) 712-6020 x302	Manufacturer of a variety of bullet, blast, and attack resistant products.	*NS7000* aluminum and *NS3000* steel windows are available in a variety of frame profiles. Custom profiles are available. Stainless steel, bronze, or aluminum clad finishes are available for steel frames.
Physical Security–Masonry Arts	http://www.masonryarts.com/ mhastings@masonryarts.com 2105 3rd Avenue North Bessemer, AL 35020	DeVane Hocutt dhocutt@masonryarts.com Tel: (205) 425-4072, ext 229	Manufacturer with capabilities that include design, fabrication, assembly, and installation of window systems. U.S. retrofit contractor for the removal and replacement or re-glazing of exterior skins of existing, occupied buildings.	Blast-resistant windows are designed to meet particular architectural specifications. Historic window frames can be replicated in blast-resistant bronze or steel when required.

COMPANY	CONTACT INFORMATION	POC 1	COMPANY PROFILE	PRODUCT DESCRIPTION
Pinnacle Armor	http://www.pinnaclearmor.com Sales@PinnacleArmor.com 5425 East Home Avenue #104 Fresno, CA 93727	Murray Neal Tel: (559) 320-1221 Tom Schroer tschroer@pinnaclearmor.com Tel: (559) 320-1221	Provider of physical security products for ballistic, explosive blast, and forced entry threats and services including consultation, design, fabrication, manufacturing, and installation. Products and services utilized for facilities, vessels, aircraft, and body armor applications.	*BlastLite* explosion mitigating system is a fully operational, hinged secondary window system. Replacement systems are also available.
SwissShade Security	http://www.swissshade.com sales@swissshade.com HCR 2 Box 499 N Tucson, AZ 85735	Franz Brun sales@swissshade.com Tel: (520) 822-1982	Provider of replacement windows and doors, custom made security products, awnings, and sun screens. Security windows can be used for new construction or retrofits, and can be designed for burglar, bullet, and blast resistance.	*Fauser Window System 81* allows for an architecturally correct window replacement. Windows may be clad in a variety of materials to represent the visual aspects of the receiving historic building.
Traco	http://www.traco.com/ market@traco.com 71 Progress Avenue Cranberry Township, PA 16066	Mike Manteghi mike.manteghi@traco.com Tel: (724) 776-7050 Steven Saffell steven.saffell@traco.com Tel: (724) 742-1943 Fax: (724) 776-7001	Products include custom designed windows, doors, skylights, curtain walls, entrances, impact resistant windows and doors, and blast-resistant windows.	The *TR-9700* heavy commercial thermal aluminum window is a single-hung side load model. The *NX350* is a heavy commercial thermal aluminum project-out model. Custom designed blast-resistant windows include fixed and operable configurations, single and double hung, casement and projected, horizontal sliders, and fixed (including complex units).
U.S. Bulletproofing	www.usbulletproofing.com info@usbulletproofing.com 4925 Lawrence Street Hyattsville, MD 20781	Ken Sampson ksampson@usbulletproofing.com Tel: (301) 454-0155	Supplies forced entry, bullet resistant, and blast resistant high security products.	*USA Series* aluminum windows include sliding, operable (casement, split, or projected), and fixed units. *USS Series* steel windows are available in fixed configurations. Customized products and cladding are available.

COMPANY	CONTACT INFORMATION	POC 1	COMPANY PROFILE	PRODUCT DESCRIPTION
United States Aluminum	www.usalum.com 200 Singleton Drive Waxahachie, TX 75165	Chris Gall chrisgall@usalum.com Tel: (800) 462-5668 Fax: (800) 289-6440	Offers a full range of aluminum entrance doors, storefronts, window walls, curtain walls, and sloped glazing systems.	*The Defender* series is an engineered and tested blast-resistant storefront system. The series consists of *BR604* and *BR606* models, and are both available in anodized and painted finishes.

REPORT DOCUMENTATION PAGE

Form Approved
OMB No. 0704-0188

Public reporting burden for this collection of information is estimated to average 1 hour per response, including the time for reviewing instructions, searching existing data sources, gathering and maintaining the data needed, and completing and reviewing this collection of information. Send comments regarding this burden estimate or any other aspect of this collection of information, including suggestions for reducing this burden to Department of Defense, Washington Headquarters Services, Directorate for Information Operations and Reports (0704-0188), 1215 Jefferson Davis Highway, Suite 1204, Arlington, VA 22202-4302. Respondents should be aware that notwithstanding any other provision of law, no person shall be subject to any penalty for failing to comply with a collection of information if it does not display a currently valid OMB control number. **PLEASE DO NOT RETURN YOUR FORM TO THE ABOVE ADDRESS.**

1. REPORT DATE *(DD-MM-YYYY)*
September 2007

2. REPORT TYPE
Final

3. DATES COVERED *(From - To)*

4. TITLE AND SUBTITLE
Performance Testing of Historically Appropriate Blast-Resistant Windows: Volume 1 – Background and Testing Program

5a. CONTRACT NUMBER
97/0100/701/A/W31RYO41533803/PO

5b. GRANT NUMBER

5c. PROGRAM ELEMENT NUMBER

6. AUTHOR(S)
Julie L. Webster and Patrick E. Reicher

5d. PROJECT NUMBER

5e. TASK NUMBER

5f. WORK UNIT NUMBER

7. PERFORMING ORGANIZATION NAME(S) AND ADDRESS(ES)

U.S. Army Engineer Research and Development Center
Construction Engineering Research Laboratory
P.O. Box 9005
Champaign, IL 61826-9005

8. PERFORMING ORGANIZATION REPORT NUMBER
ERDC/CERL TR-07-39

9. SPONSORING / MONITORING AGENCY NAME(S) AND ADDRESS(ES)

DoD Legacy Resource Management Program
1225 Clark Street, Suite 1500
Arlington, VA 22202

10. SPONSOR/MONITOR'S ACRONYM(S)
ODUSD (ES) EQ-EQLP

11. SPONSOR/MONITOR'S REPORT NUMBER(S)
04-219

12. DISTRIBUTION / AVAILABILITY STATEMENT
Approved for public release; distribution is unlimited.

13. SUPPLEMENTARY NOTES

14. ABSTRACT

This study leverages findings of Legacy Project 03-176, Antiterrorism Measures for Historic Properties. The authors identified few sources of UFC 4-010-01-compliant replacement windows appropriate for historic building applications. Most window suppliers will quote a job to pro-duce prototype windows, but they (1) have no current blast test data for their product, and (2) have no experience with historic building applications. This suggested a need for window testing to help ensure that DoD has multiple trusted sources for historically compatible blast-resistant window products.

15. SUBJECT TERMS
Unified Facilities Criteria 4-010-01, antiterrorism, Secretary of the Interior's Standards for Rehabilitation, historic preservation

16. SECURITY CLASSIFICATION OF:			17. LIMITATION OF ABSTRACT	18. NUMBER OF PAGES	19a. NAME OF RESPONSIBLE PERSON
a. REPORT	b. ABSTRACT	c. THIS PAGE			19b. TELEPHONE NUMBER *(include area code)*
Unclassified	Unclassified	Unclassified		117	