Processing of PAX-2A in a Twin Screw Extruder

U.S. ARMY TANK-AUTOMOTIVE ARMAMENTS COMMAND

U.S. ARMY ARMAMENT RESEARCH, DEVELOPMENT AND ENGINEERING CENTER
PICATINNY ARSENAL, NJ 07806-5000

Joint Ordnance Commands Group

Continuous Mixer & Extruder Users Group

May 1, 2001

Kristin Jasinkiewicz
Warheads, Energetics and Combat-support Armaments Center
Armament System Process Division

Outline

- Background
- Development Approach
- Process Development
- Results & Discussion
- Conclusions

Background & Development Approach

- **Background**
  - **Current production is performed in vertical mixer**
  - **Batch processing of formulation requires a solvent level of 25-35 wt. %**
- **Development Approach**
  - **Material Characterization**
    - Inert Simulant Identification
    - Rheology
  - **Develop Mathematical Model**
  - **Pilot Scale Processing**
    - Inert Neat Feed Streams
    - Live Neat Feed Streams
  - **Product Analysis**

TACOM-ARDEC Facility

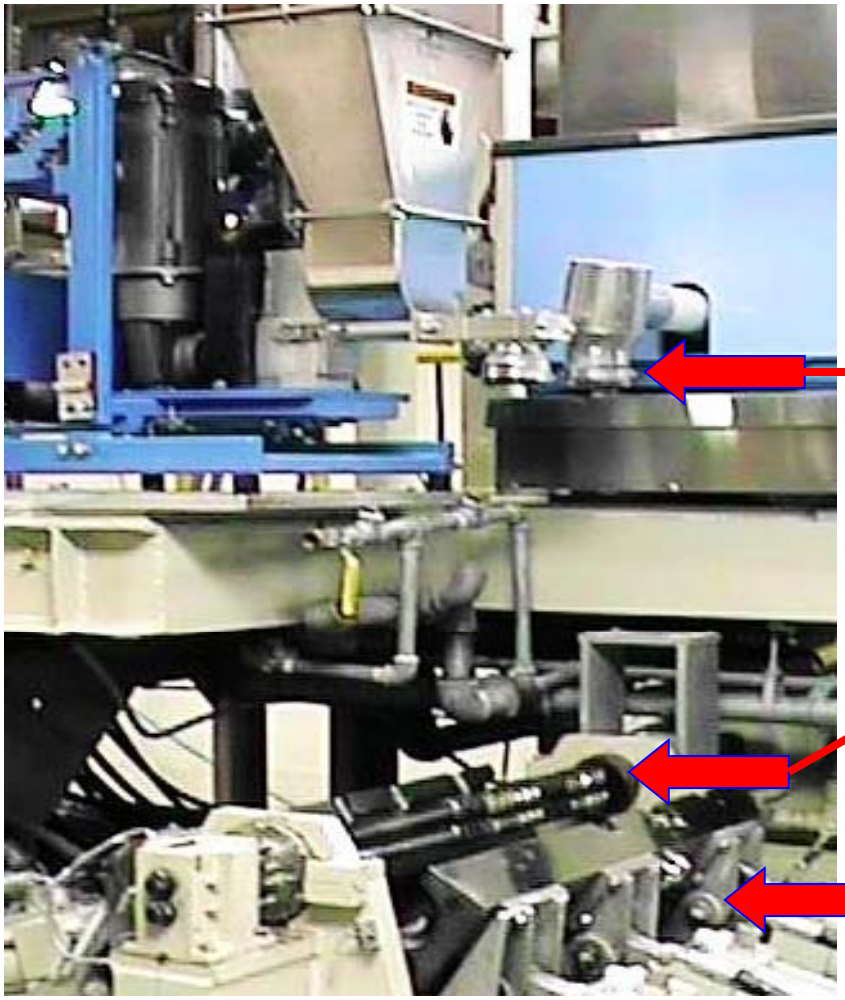

Extruder Specifications:

- 40-mm Baker Perkins
- Clam Shell Design
- Capacity of 10-50 lb/hr

Loss-in-weight Feeders

Twin Screws

Barrel & Die

TIME Partnership
Used for Process Development

Thiokol

- Rheology
- Small Scale Processing
- Production Scale Processing
- Product Analysis

Stevens Institute of Technology (HFMI)

- Rheological Interpretation
- Mathematical Modeling
- Goodness of Mix Analysis

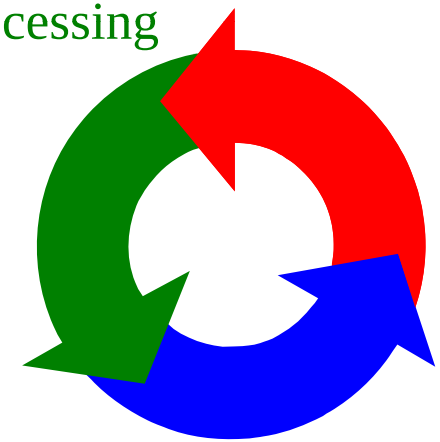

TACOM-ARDEC

- Project Coordination
- Pilot Scale Processing
- Product Analysis

Material Characterization & Mathematical Modeling

- **Material Characterization**
  - **Inert Simulant Identification**
    - Candidates: KCl, Melamine, Dechlorane Plus 515
    - Dechlorane Plus 515
  - **Rheological Characterization**
    - Shear viscosity behavior indicates:
      - Optimum solvent level of 6.5 wt. %
      - Minimum solvent level of 5.0 wt. %
- **Mathematical Modeling**
  - **Development of Process Parameters**
    - Screw Configuration
    - Die Design
    - Prediction of Extrusion Characteristics
      - Internal Pressures & Temperatures
      - Die Exit Pressure
      - Identification of critical processing regimes

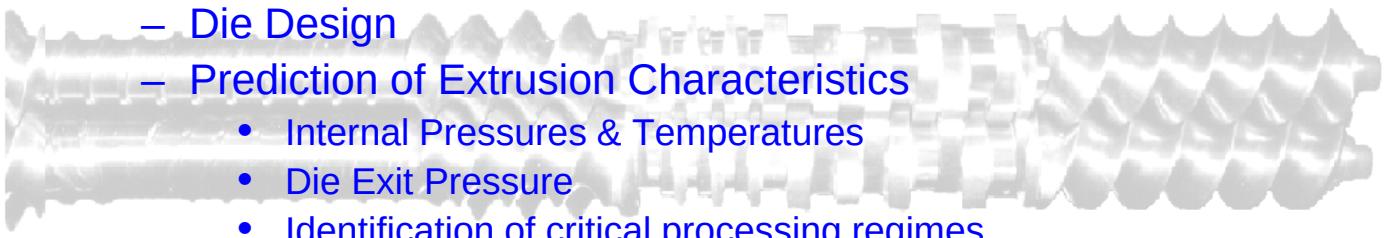

Inert Process Development

- **Initial screw configuration**
  - **Product Properties**
    - Extrudate strand lacked integrity
    - Non-homogeneous product (73-89% Dechlorane Plus)
- **Haake Torque Rheometer Batch Mixing Experiments at HFMI**
  - Elastic Gel forms prohibiting remaining liquid component from permeating the mixture
    - CAB and BDNPA/F or
    - CAB and Solvent
  - **Premixing the second liquid with the Dechlorane Plus allows for thorough mixing of all ingredients**

Order of Ingredient Introduction is Critical

Inert Process Development

- Model predicted a two zone screw configuration for neat processing in the TSE
  - CAB and BDNPA/F
  - Dechlorane Plus and Solvent
- Optimized process parameters
  - Barrel Temperatures - 105°F
  - Die Zone - 70°F
  - Solvent level 6.5-7.0 wt. %
- Only <u>ONE</u> iterative step was required to develop a screw configuration which produced a homogenous PAX-2A product

Screw Configuration

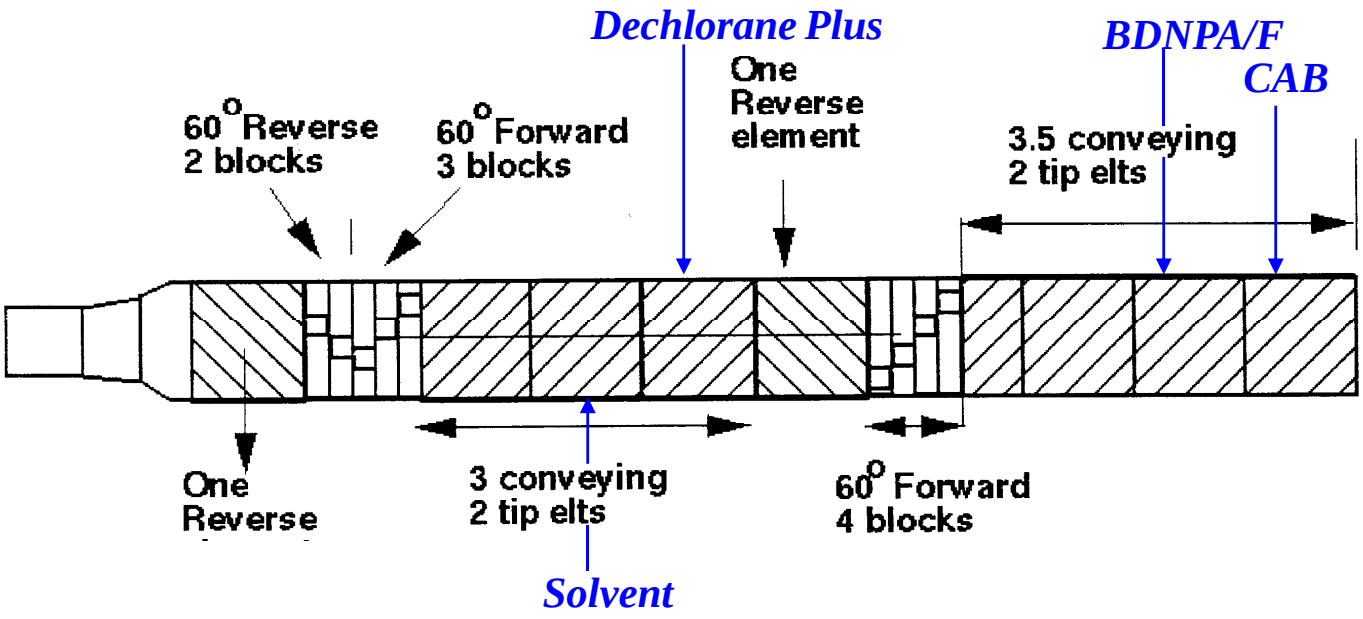

Live Neat Processing

- **Feeding Dry HMX**
  - Vertical agitation of the Brabendar hopper was required to overcome bridging of the material
- **Live Processing**
  - Initiated September 30, 1999
  - 5 processing runs:
    - Solvent Level Range: 10-16 wt. %
    - 0.125” single strand die designed with model
    - Model Validation: Die pressures slightly lower (~50 psi) than predicted values

Conclusions

- Developed Mathematical Model and verified predicted processing parameters
- Determined order of mixing formulation constituents is critical for obtaining a homogenous mixed product
- Processed homogenous neat material within 1% of formulation
- Reduced PAX-2A processing solvent level from 20-35 wt. % used in batch mixes to 7-10 wt. % for twin screw extrusion processing
- The 40-mm extruder at TACOM-ARDEC was the first facility to make PAX-2A using neat feed streams

Acknowledgments

Thiokol

- Alan Allred
- Andrew Haaland
- Mike Rose
- Dave Taylor

Stevens Institute of Technology

- Dr. Dilhan Kalyon
- Dr. Sudhir Railkar
- Dr. Rahmi Yazici
- Jason Garrow

TACOM-ARDEC

- David Gilson
- Vincent Gonsalves
- Eileen Heider
- Roderick King