Continuous Processing Applied to Mass Production of Airbag Propellant Grains

E.Giraud; G.Chounet

2001 Continuous Mixer and Extruder User 's Group Conference
Picatinny Arsenal, May 1-2, 2001

Summary of the presentation

- SNPE Company
- Airbag Propellant Grains business : key dates, key figures, SNPE Propulsion production
- Airbag Propellant Grains Manufacturing technology : Continuous Processing, die design
- Quality and safety aspects
- Conclusions

SNPE Company

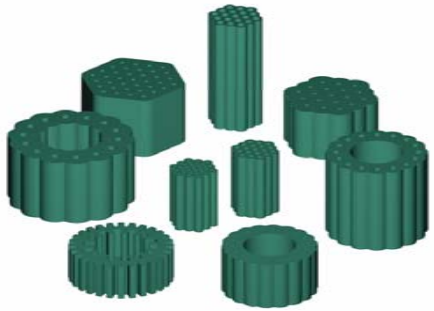

Location and business of SNPE S.A

Energetic Materials

- Advanced Technologies and Propulsion
- Tactical propulsion
- Explosives and Propellants
- Commercial explosives

Fine Chemicals

- Intermediates and Agrochemicals
- Pharmaceuticals
- Nitrocellulose

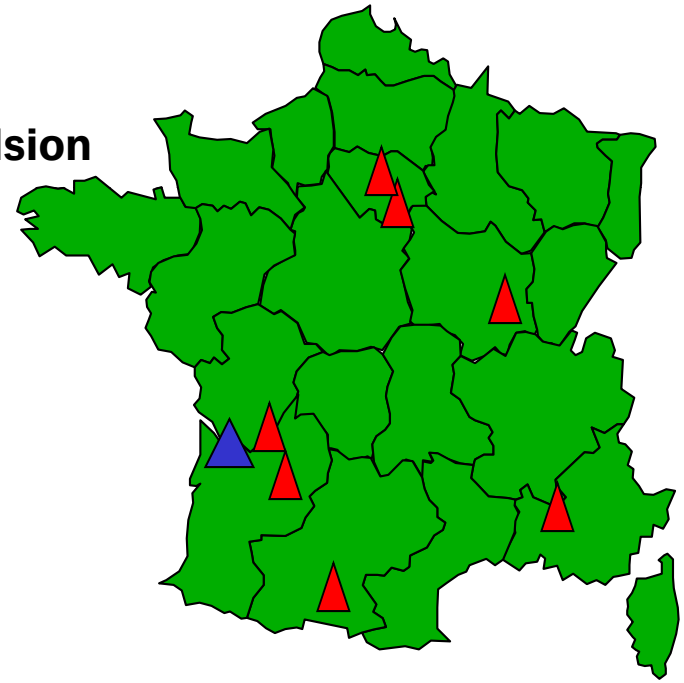

Location of SNPE S.A in France

Saint-Médard Plant

Main Activities :

- Space Propulsion
- Ballistic motors production
- Airbag Propellant Grains
- Tactical rocket Motors (in collaboration with CELERG subsidiary of SNPE and EADS)

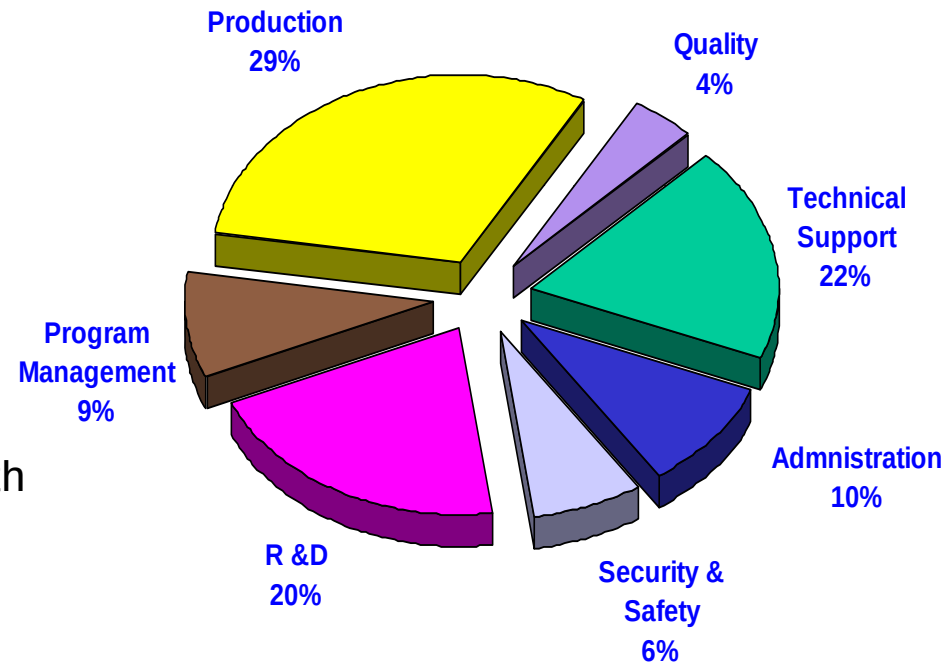

Employee number by sector (Total : 730)

Continuous Processing Applied to Mass production of Airbag Propellant Grains

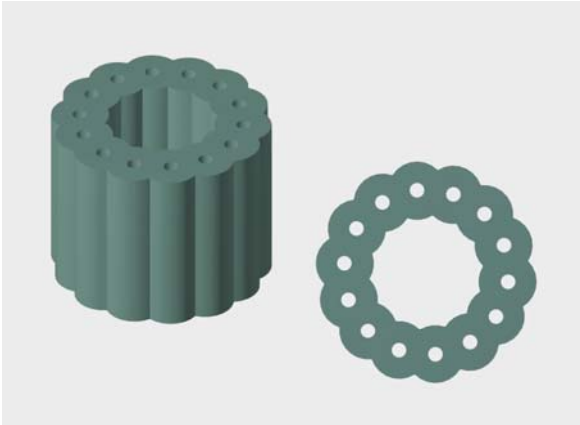

Airbag Business

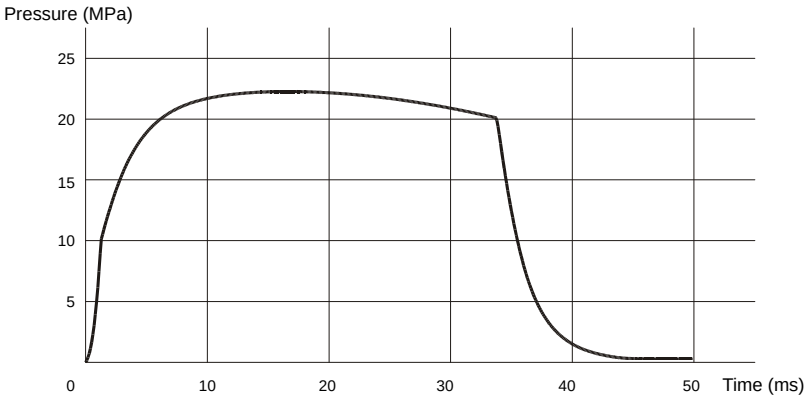

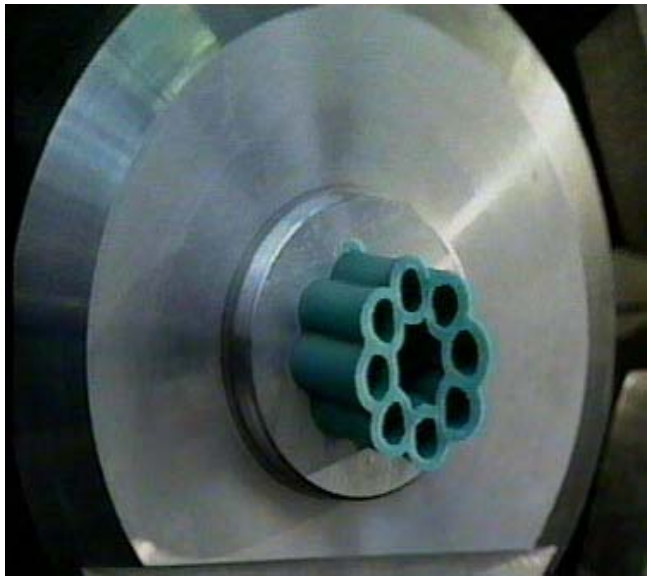

Airbags business

Key dates :

- **1992 :** Begining of airbag activity at SNPE (Double base solventless propellant, batch, ram press based, process)
- **Mid 1994 :** Development of continuous processing for extruded composite propellant
- **1996 :** Starting of **Production1 unit** in *one shift* Mass Production (TSE based processing)
- **1999 :** Starting of **Production1 unit** in *Three shifts* Mass Production (TSE based processing)
- **2000 :** Starting of **Production 2 unit**, TSE continuous facility in Saint Medard (two then three shifts)

Airbags business

Key Figures :

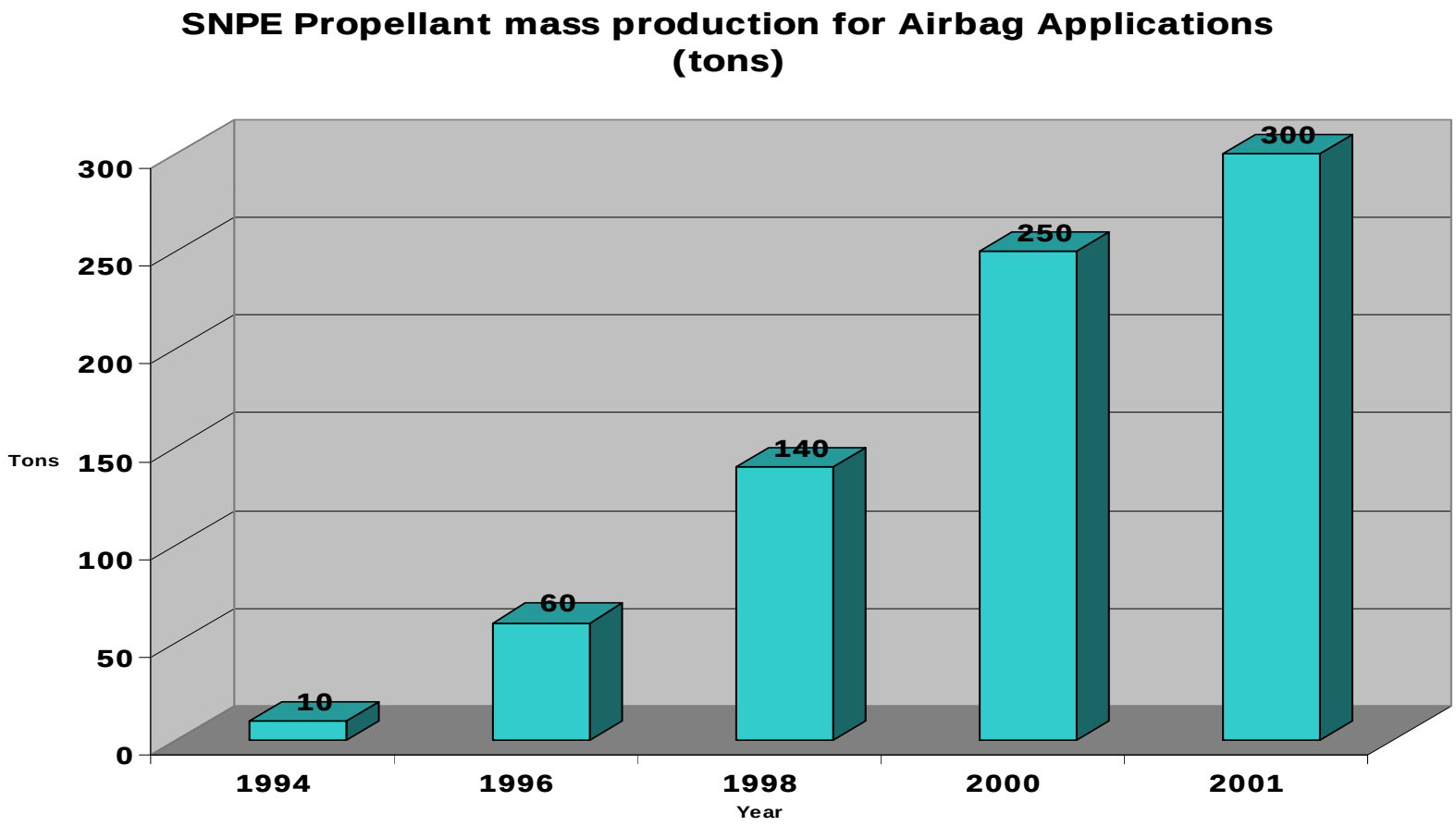

Airbags business

SNPE Propulsion production :

- Propellant formulations tailored to meet customers requirements in terms of :
  - Gaz temperature
  - Gaz composition
  - Gaz particle content
  - Burning rate

- **Extruded1** : solventless thermosetting composite, high burning rate

- **Extruded2** : solvent composite thermosetting, low temperature

- **ExtrudedNew** : solventless thermosetting composite, particle free (in progress)

- **Extrudedfuture** : .....future requirements

- Several grains shape fitted to customers applications :
  - Driver
  - Passenger
  - Hybrid technology
  - Smart technology
  - Side Impact
  - etc...

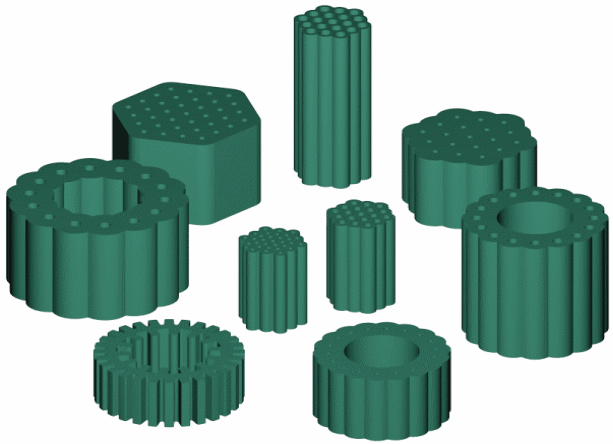

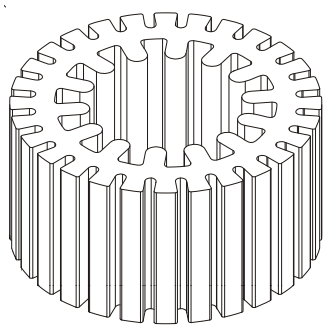

Airbag propellant Grains Manufacturing technology : Continuous Processing

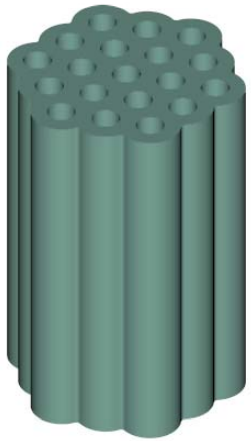

2001 Continuous Mixer and Extruder User 's Group Conference
Picatinny Arsenal, May 1-2, 2001

Airbags TSE Facilities at SNPE Propulsion

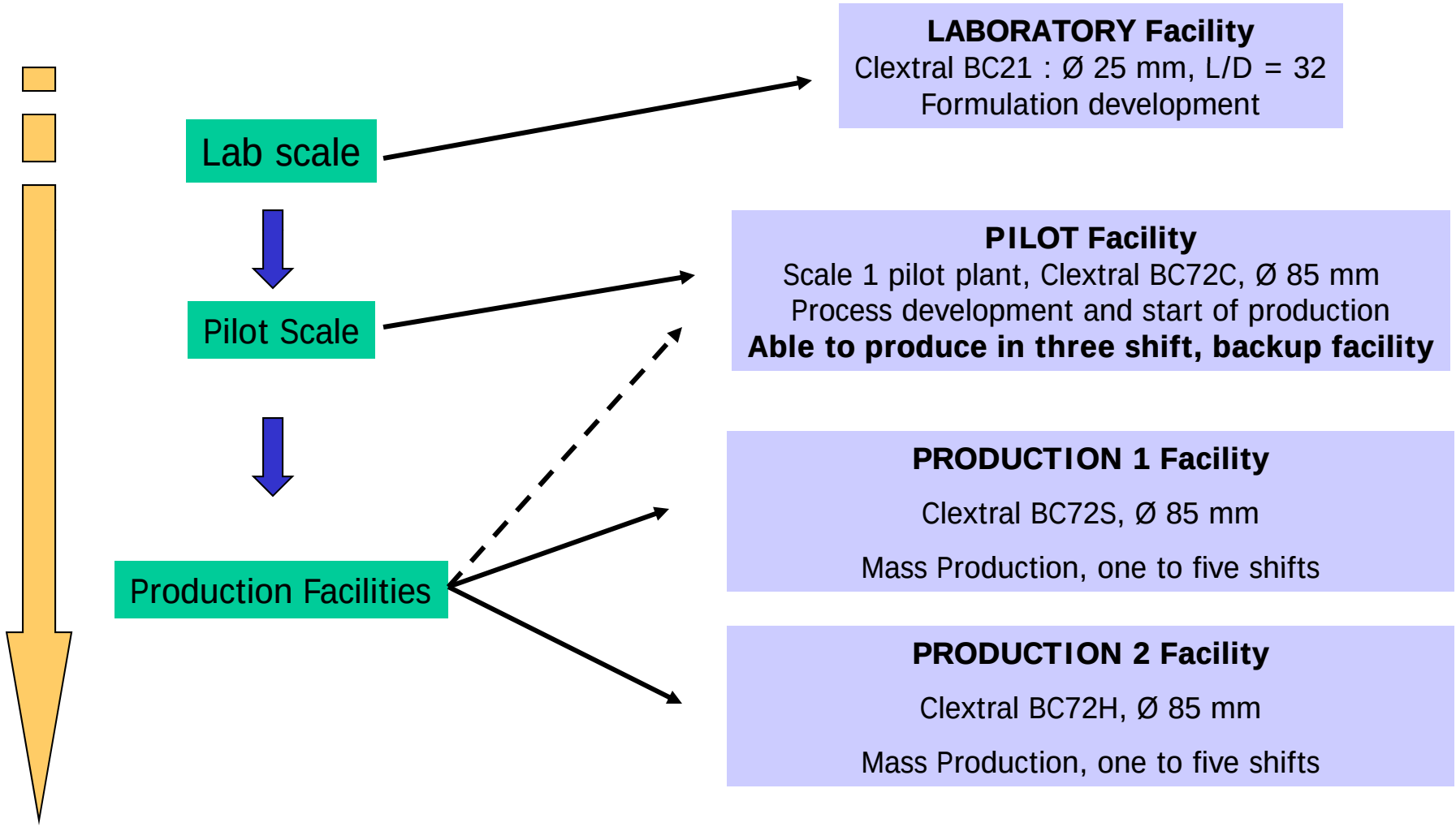

Continuous Processing Applied to Mass production of Airbag Propellant Grains

General flowsheet of the extrusion process

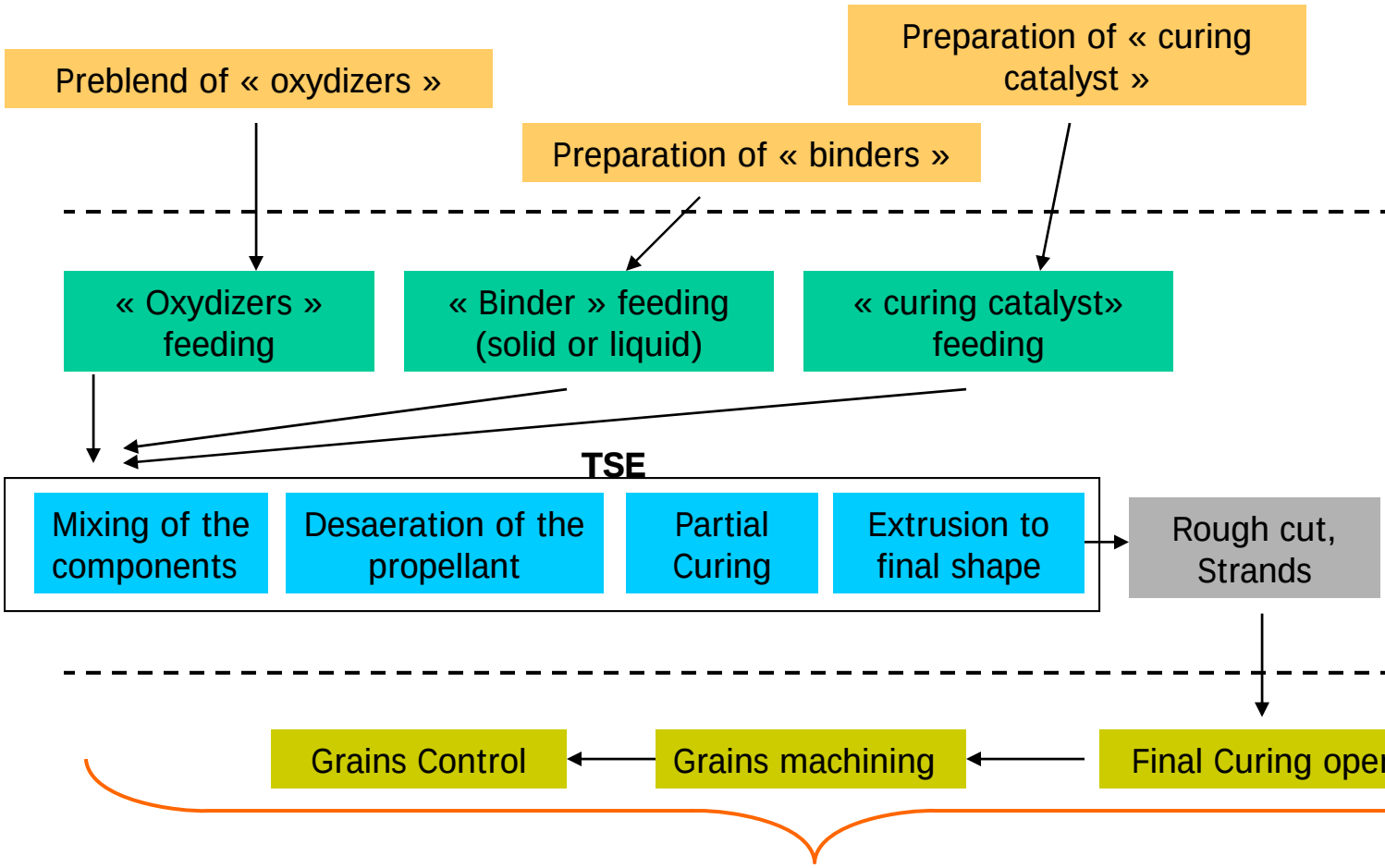

- In order to reduce the number of feed streams
- According to the formulation 3 to 5 different feed streams
- According to the formulation and shape total flow rate from 100 to 200 lbs/h

SPC on Process and material parameters

Lab Facility

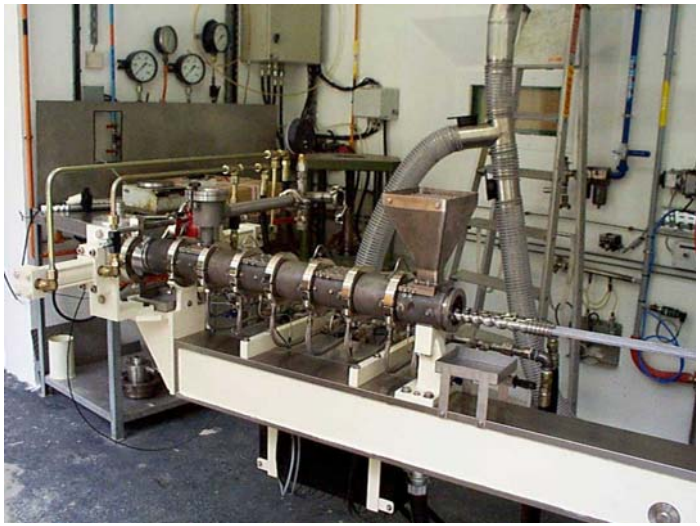

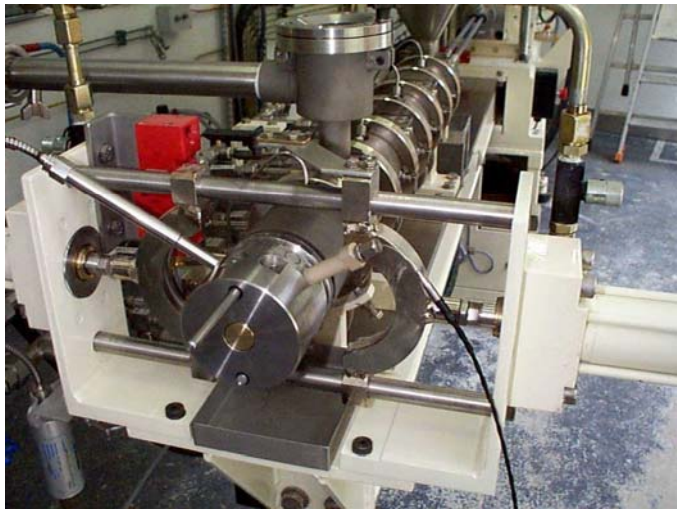

CLEXTRAL BC 21 « Laboratory »

- Sliding barrel
- Diameter 25 mm, L/D = 32
- Eight thermal regulation zones
- Running under vacuum

Pilot scale Facility

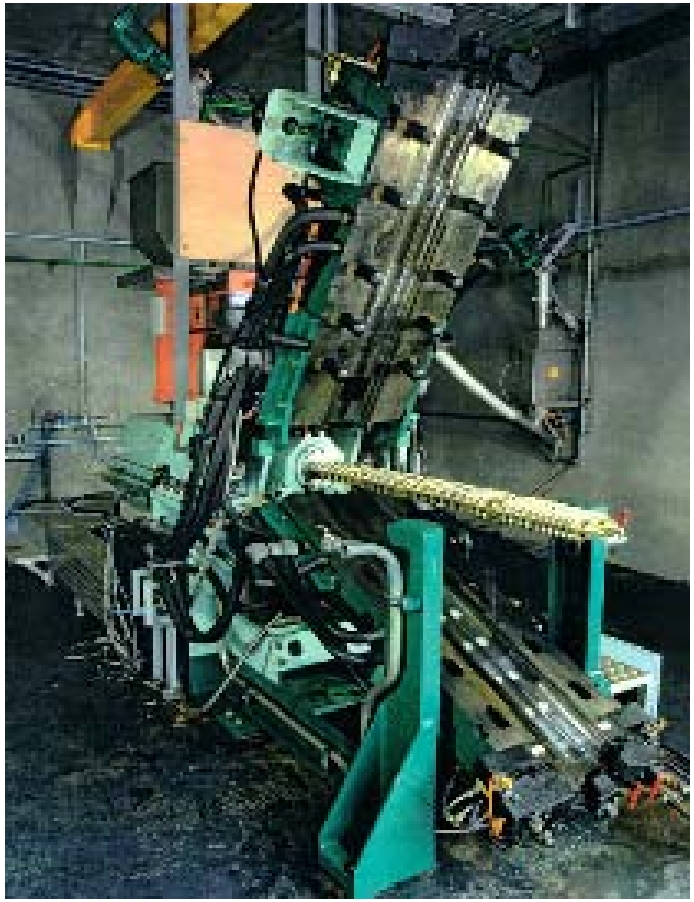

BC 72 « PILOT »

- Crocodile opening barrel
- Diameter 85 mm, L/D = 16
- Six thermal regulation zones
- Running under vacuum
- Full scale PILOt facility
- Capacity to produce in three shifts already demonstrated

full scale pilot facility shorten the development time

Die Design

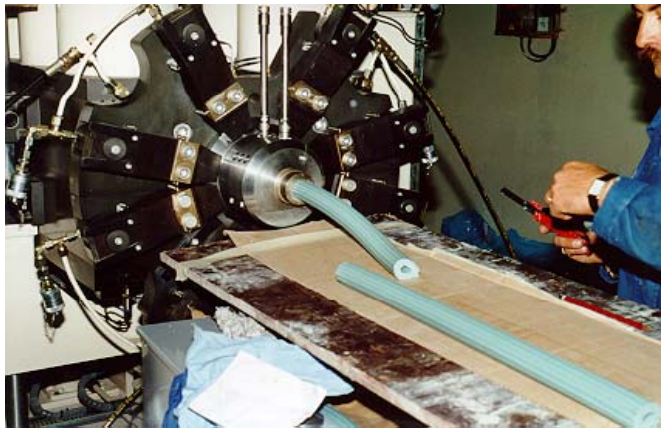

General rules for die desing

- Productivity is depending on TSE Flow rate
- TSE Flowrate is related to Pressure at the die
- It is mandatory to take time to designand optimize properly the dies
- Die design is done using CAD softwares

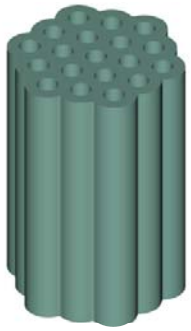

Grain Design

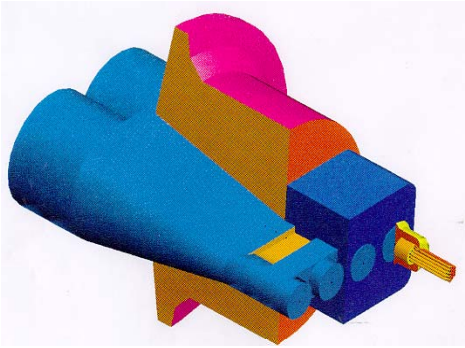

Die and converging Zone Design

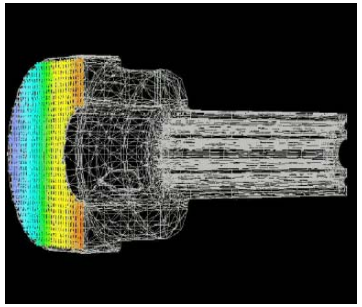

CAD simulation

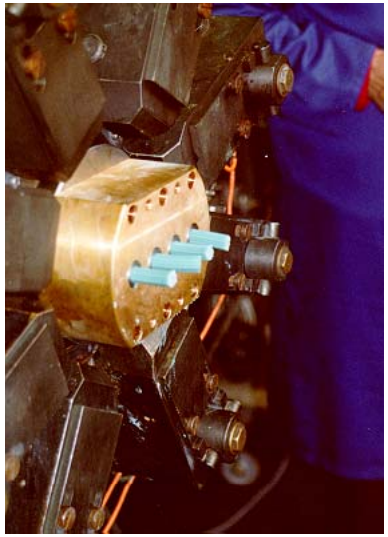

Operationnal testings and production

Quality and Safety Aspects

Quality Reproducibility aspects

- Average Production : **135 000 Propellant Grains for airbag per day**

- Main characteristics of the grains :
  - Material Density
  - Burning rate
  - Geometry

- Exemple of reproducibility of the Continuous Process
  - Theoretical density : 1,800 ;
  - standard deviation during a run : 0,002
  - standard deviation between days : 0,003

Safety aspects

- **Twin Screw Extruders and Facilities are designed for the safe handlig of Energetics**

Pumping screw element

Exemple of safety devices:

- Quick opening of the barrels
- Quick opening of the die/Converging Zone
- I.R measurement of strands temperature
- Deluge systems
- Vent ports
- .....

- **Two pyrotechnic incidents have been experienced in five years resulting in few days of production stop**
  - Pyrotechnic incident were related to foreign bodies
  - No damage done by fire to barrels, screws, shafts, converging zones
  - few damages to dies and peripheral devices (electric wiring, pipes...)

Conclusions

Conclusion

- SNPE Propulsion has used the TSE based continuous Processing for Mass Production of airbags since1996.
- In five years we have done the demonstration of the high efficiency of the process.
- More than 25 000 000 of gaz generator grains are manufactured each year in agreement with customers requirements.
- Continuous Processing is a very flexible production process, with very high degree of reproducibility (material density, grain geometry, grain mass, material burning rate etc...)
- The safety devices involved in the design of the facilities generate a very low impact of pyrotechnic incident on production capacity.