Advances in Technology for Microfeeding

Optimizing for Success

K-Tron Process Group

PROCESS GROUP

FEEDERS
Volumetric and gravimetric feeding equipment

PCS
Pneumatic material conveying equipment

colormax
Ancilliary equipment for plastics industry

K-TRON ELECTRONICS
Electronic components

Optimizing for Success

Corporate Overview

Design, manufacturing and marketing of high quality feeding equipment, conveying systems, size reduction equipment and electronic components worldwide

Annual sales of over US$ 112 million

Ca. 500 employees worldwide

K-TRON INTERNATIONAL

The K-Tron Family

Internet access: www.ktron.com

Public company based in Pitman, New Jersey USA

NASDAQ symbol KTII

Optimizing for Success

K-Tron Milestones

1900 O. Soder AG is founded in Niederlenz, Switzerland, to manufacture flour mills

1949 K-Tron (then still Monsell) is founded in USA, to manufacture pneumatic scales

1972 K-Tron introduces the first digitally controlled belt scale worldwide

1975 K-Tron acquires Soder AG

1976 K-Tron introduces loss-in-weight feeders with digital load cells

1989 K-Tron introduces modular feeders with Smart Force Transducers

1997 K-Tron acquires Hurricane Ltd., a manufacturer of pneumatic conveying equipment

1999 K-Tron introduces SmartConnex Control System and SFT III

2000 K-Tron acquires Colormax Ltd.

2001 K-Tron acquires Pneumatic Conveying Systems Ltd.

2003 K-Tron acquires Pennsylvania Crusher Corp. and Jeffrey Corp.

2005 K-Tron acquires Grunlach Inc

2006 K-Tron acquires Premier Pneumatics

Optimizing for Success

Global Network

- K-Tron America, Inc.
- K-Tron (Switzerland) Ltd.
- K-Tron France S.a.r.l.
- K-Tron Deutschland GmbH
- K-Tron PCS GB
- K-Tron Asia Pte.
- K-Tron China Ltd.

- K-Tron Benelux n.v.
- K-Tron Japan

- Penn. Crusher / Jeffrey

- Premier Pneumatics

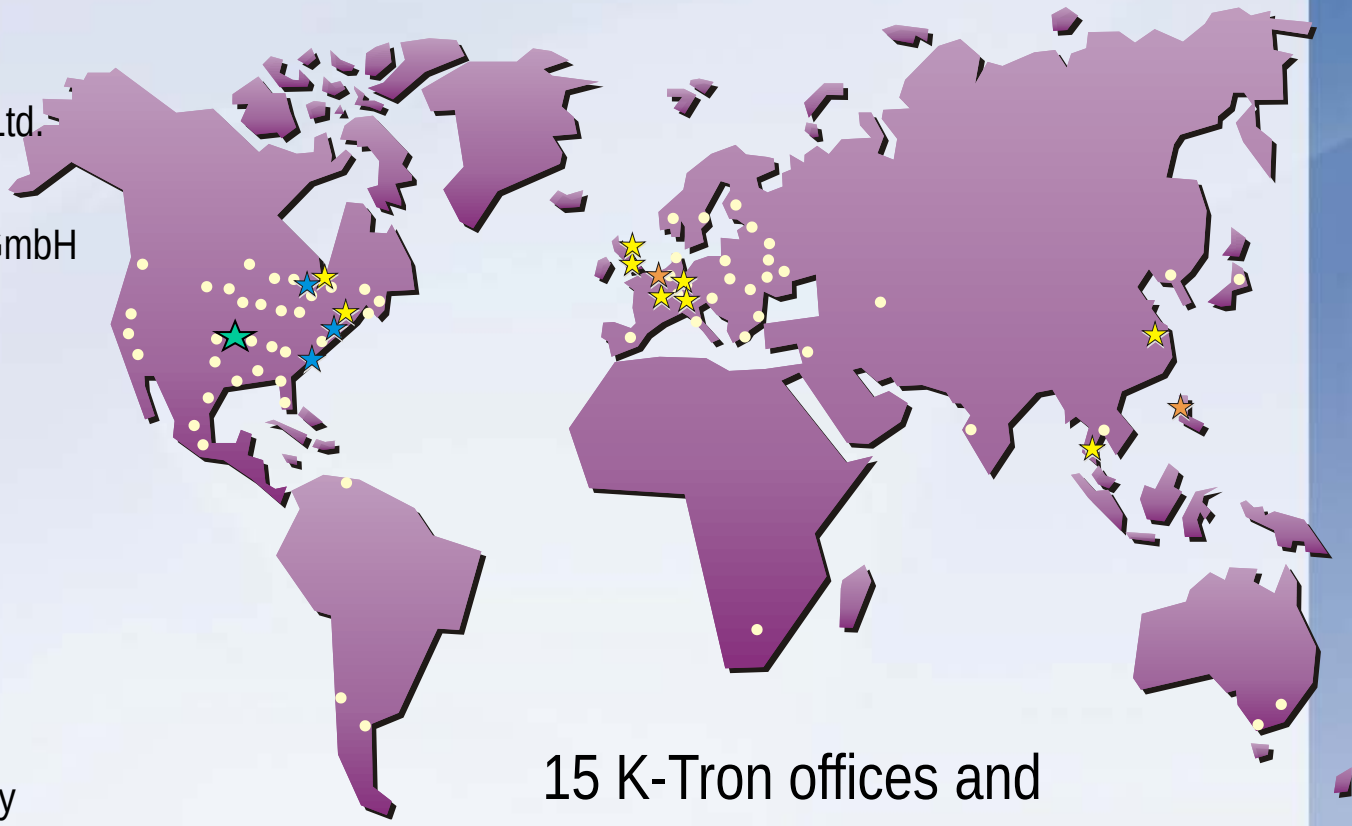

15 K-Tron offices and over 80 representatives worldwide

Optimizing for Success

Locations

K-Tron France S.a.r.l.

K-Tron Deutschland GmbH

K-Tron PCS GB

K-Tron America, Inc.

K-Tron (Switzerland) Ltd.

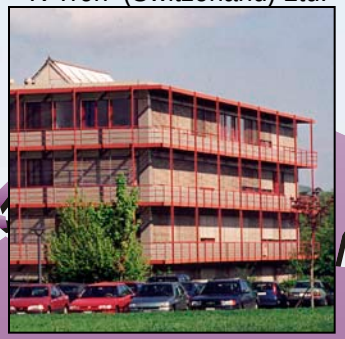

K-Tron China

K-Tron Asia Pte.

K-Tron Feeders

- ✓ High quality volumetric and gravimetric feeding systems for all industries

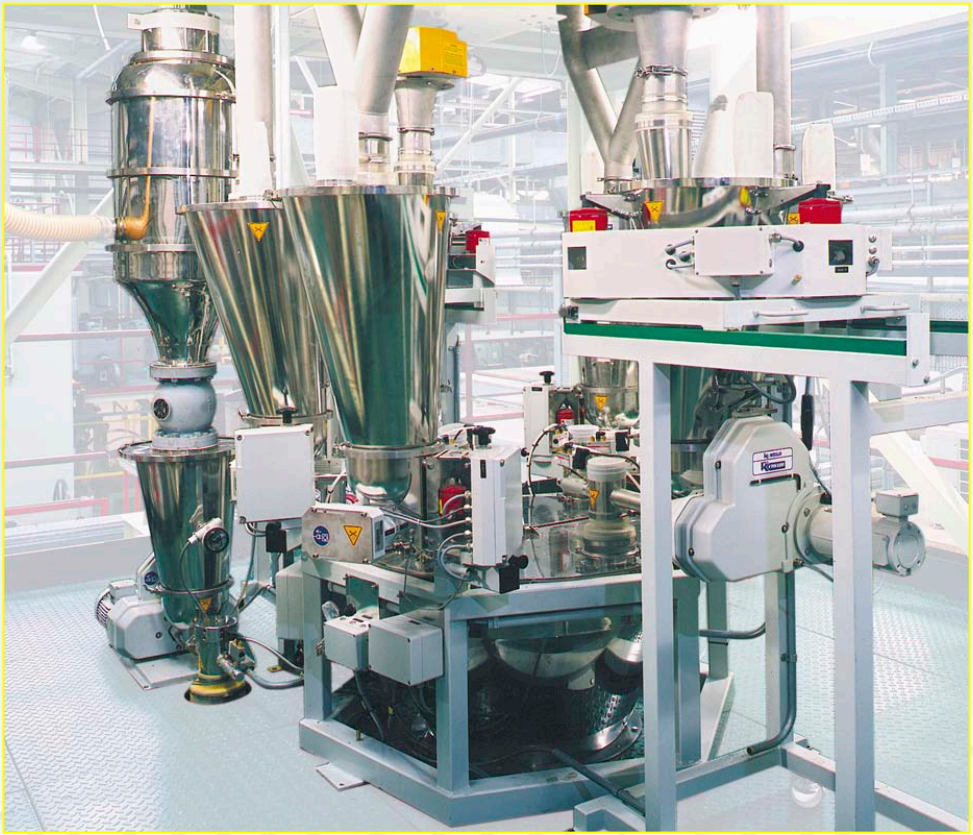

K-Tron Pneumatic Companies

- ✓ High quality pneumatic conveying systems, equipment and services for the plastics, food, pharmaceutical, and chemical markets

Premier Pneumatics, Inc.

TR·N PCS

K-Tron Process Group – Industries Served

- ✓ **Building Materials**
- ✓ **Chemical**
- ✓ **Coatings**
- ✓ **Detergents**
- ✓ **Feeds**
- ✓ **Food**
- ✓ **Personal hygiene products**
- ✓ Paper
- ✓ Pharmaceutical
- ✓ Plastics
  - Compounding
  - Wood/Plastic Compounding
  - Filaments
  - Films
- ✓ Tobacco
- ✓ ... and others

Optimizing for Success

Services provided

- ✓ Consulting and process planning
- ✓ Systems engineering including third party products
- ✓ Material test runs in state-of-the-art test laboratories
- ✓ Supervision during system installation
- ✓ Start-up and commissioning of systems
- ✓ On-site training of customer personnel
- ✓ Preventive maintenance of systems
- ✓ 24 hour spare parts and repair services
- ✓ Emergency service and 24 hour hot line
- ✓ Retrofit of installed systems with new technology

Optimizing for Success

K-Tron's K-MT12 Microfeeder

Optimizing for Success

Microfeeding as defined by K-Tron

- ✓ Microfeeding is defined as the ability to feed powders consistently and in a dynamic method to a process, at rates as low as 20 gram/hour*
  - Can be provided in either volumetric or gravimetric design, with gravimetric resulting in highest accuracies at low rates
  - Can also be provided for batch or continuous feeding
    - It has been used in limited cases as a doser, but it is not recommended for constant on/off operation

*** Reminder: 20 g/h = 0.33 g/min feedrate**

1% 2sigma dev. (60s) = 3.3 milligram/min

K-Tron Micro feeder –Design Objectives

- ✓ Design a screw feeder suitable for extremely low rates at high accuracies
- ✓ Include modified agitator mechanism to allow for minimal residual and increased yields
- ✓ Utilize K-Tron's innovative weigh cell technology to achieve highest accuracies possible
- ✓ Make feeder scaleable to higher rate K-Tron feeders T20 and T35
  - **Tip speeds and screw configurations are the same**

Optimizing for Success

Microfeeder Design Obstacles

- ✓ At very low rates, interferences with feeder and weigh scale
  - Airflow patterns in environment
  - “Noise” coming from smallest cable movements
  - Low-frequency vibrations
  - Temperature variations
- ✓ Manufacturing requirements for very small components
- ✓ Flowability issues with most cohesive materials
- ✓ Overall weight of components limits maximum amount of material usable – i.e. 2 liter

Original T12 Prototype

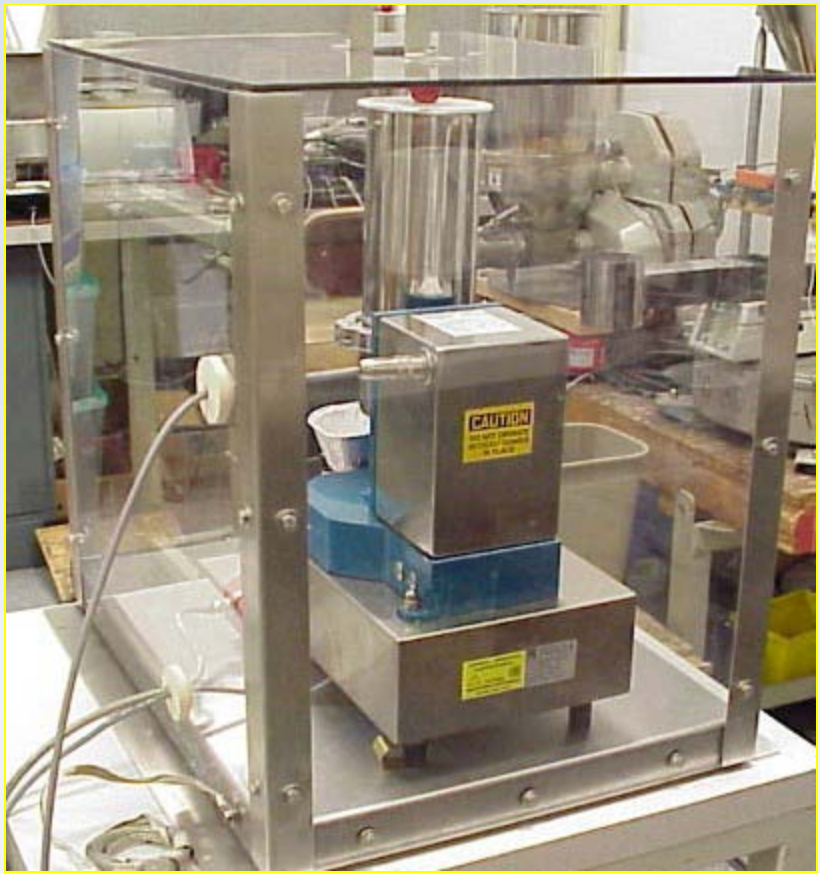

Optimizing for Success

Microfeeder History of Development

- ✓ Development of first alpha prototype - 2003
- ✓ Installation of 10 Beta Series -2004
  - Release of gravimetric design complete with draft shield
  - Redesign of hopper , agitator configurations
  - Addition of purges on shaft seals as standard
  - Release of Refill design for continuous operations
  - Redesign of scale to meet hazardous area locations and for more robust operation
- ✓ Installation of 10 additional Beta Sites with Modifications Above-2005
  - Six Pharmaceutical installations, four Chemical/Plastic
- ✓ Final Design Release- 2006

Optimizing for Success

Current T12 Design

MT12 Versions Available

- ✓ **Volumetric**
  - Standard Version – K-MV-T12
  - Pharmaceutical Version
    - Polish Level 1 – K-MV-PH1-T12
    - Polish Level 2 – K-MV-PH2-T12
- ✓ **Gravimetric –**
  - **NOTE: Always with draft shield!**
    - Standard Version – K-ML-T12
    - Pharmaceutical Version
      - Polish Level 1 – K-ML-PH1-T12
      - Polish Level 2 – K-ML-PH2-T12

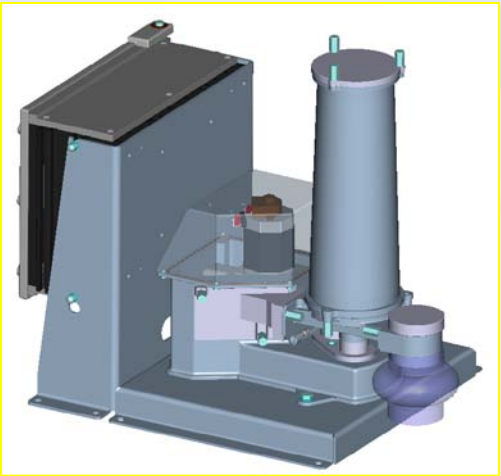

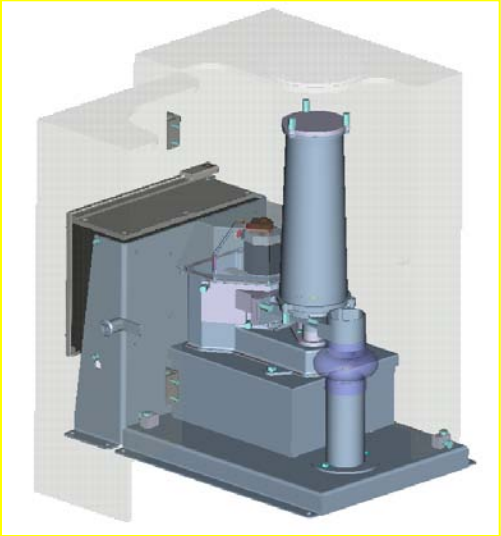

Optimizing for Success

Volumetric vs. Gravimetric

- ✓ Volumetric Feeders
  - Doesn't control mass flow
  - Operate by delivering a certain volume of material per time
  - Assumes linear volumetric displacement versus feed
- ✓ Gravimetric Feeders
  - Controls Mass Flow
  - Adjust feeder speed to achieve and maintain the desired setpoint
  - Ideal for continuous operations

Optimizing for Success

Volumetric vs. Gravimetric Principles

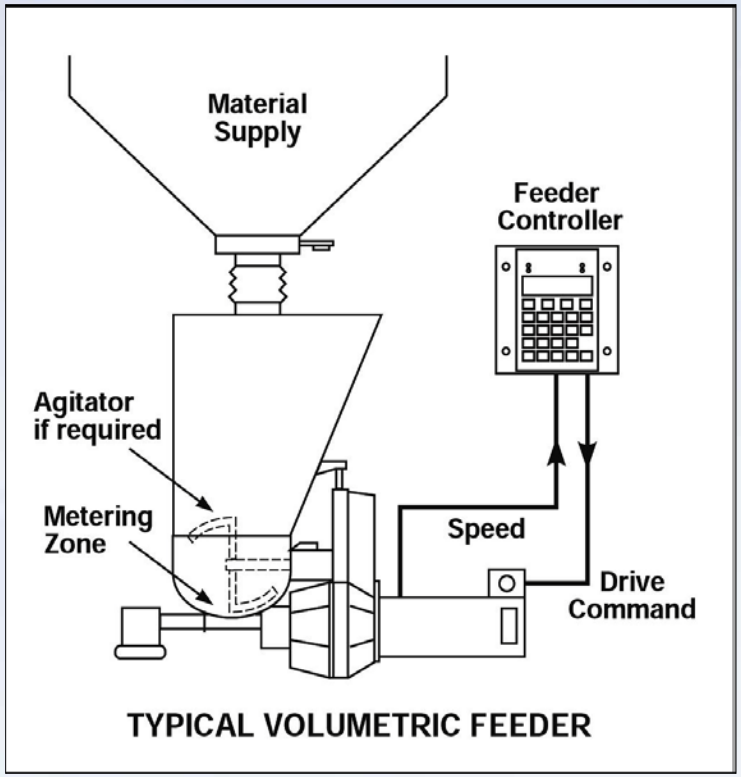

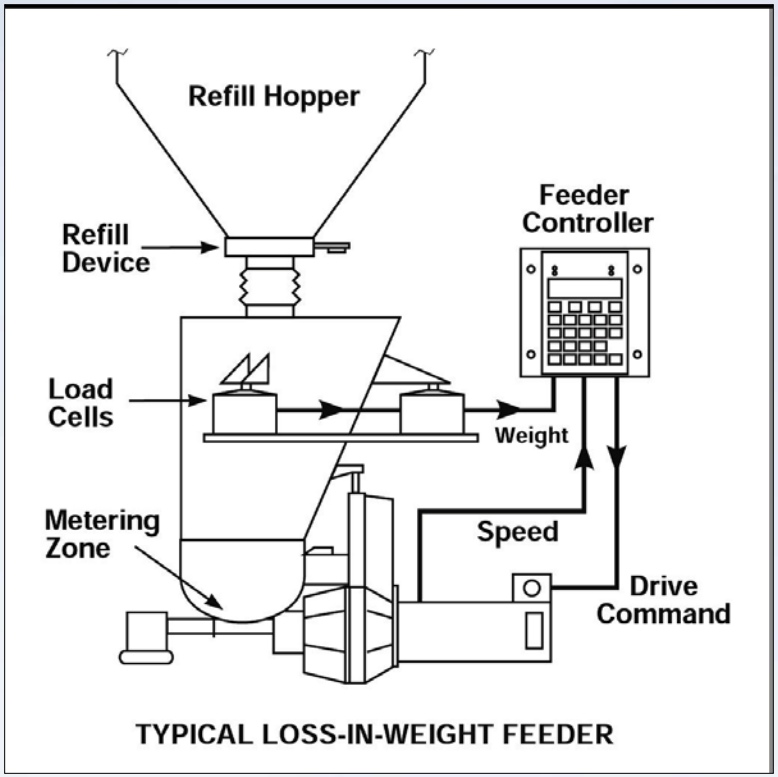

Rate is done by speed adjustment of the feed screws

LIW controller adjusts feeder speed to produce a rate of weight loss equal to the desired feed rate setpoint

Optimizing for Success

Microfeeder design features

- ✓ Designed for hazardous areas – meets ATEX and UL classifications even in gravimetric design
- ✓ Designed to be taken apart and cleaned without tools
- ✓ All product contact components can be dismantled from the feeder in one module to allow for processing of high potent compounds
- ✓ Extremely high accuracies at rates as low as 20 gm/hr
- ✓ 12mm twin screw conveying section located off-center
- ✓ Flat bottom bowl w/horizontal “scraping” agitator
- ✓ Large area material inlet (bowl to screws)
- ✓ Very low residual material when feed to empty

Optimizing for Success

Typical Accuracies

- ✓ Feed Rate desired : .025 kg/hour
- ✓ 2 Sigma deviation at 60 seconds: 0.5 % to 1.5%
- ✓ Product shown : Micronized Lactose
  - Typical particle size – avg 15-20 micron
  - Very poor flowability characteristics = cohesive!

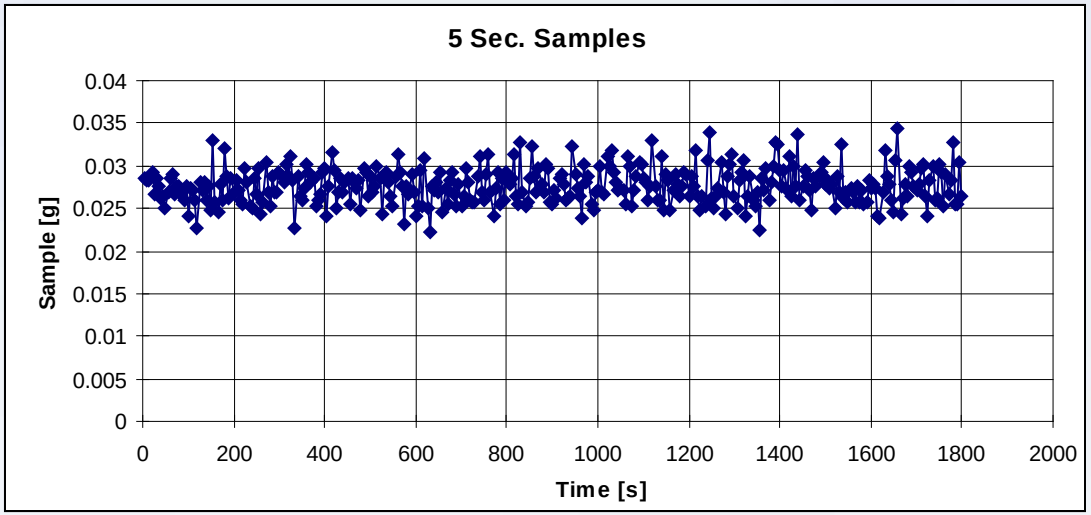

Optimizing for Success

MT12: Screw Design

- ✓ Purged Seals
- ✓ Feed screw flight extends 1.5 cm before product inlet, ensuring product moves away from screw seal
- ✓ Same config screws as K-Tron T20/T35

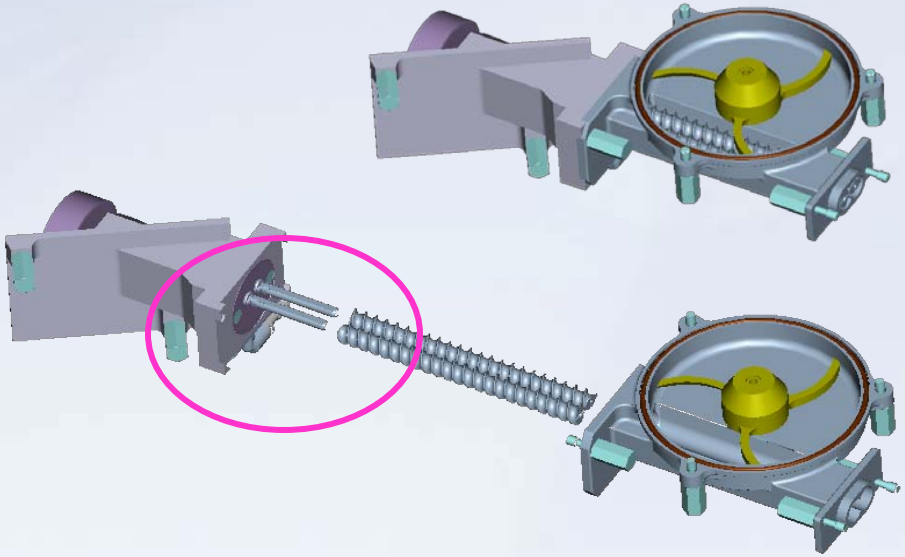

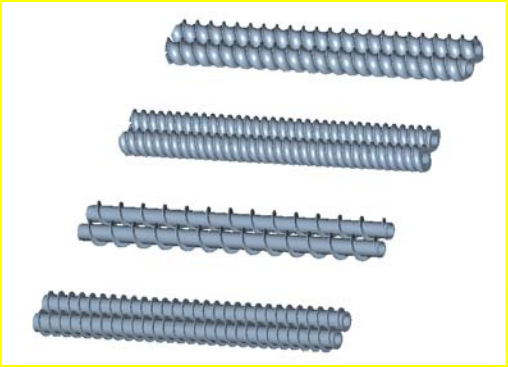

CC12
CF12
AC12
AF12

Screw Drive Assembly

- ✓ Housings and shafts = no oil or grease in drive!
- ✓ PEEK = PolyEtherEtherKetone
  - Composite used in medical devices

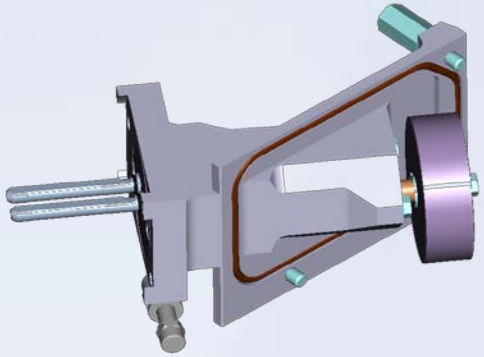

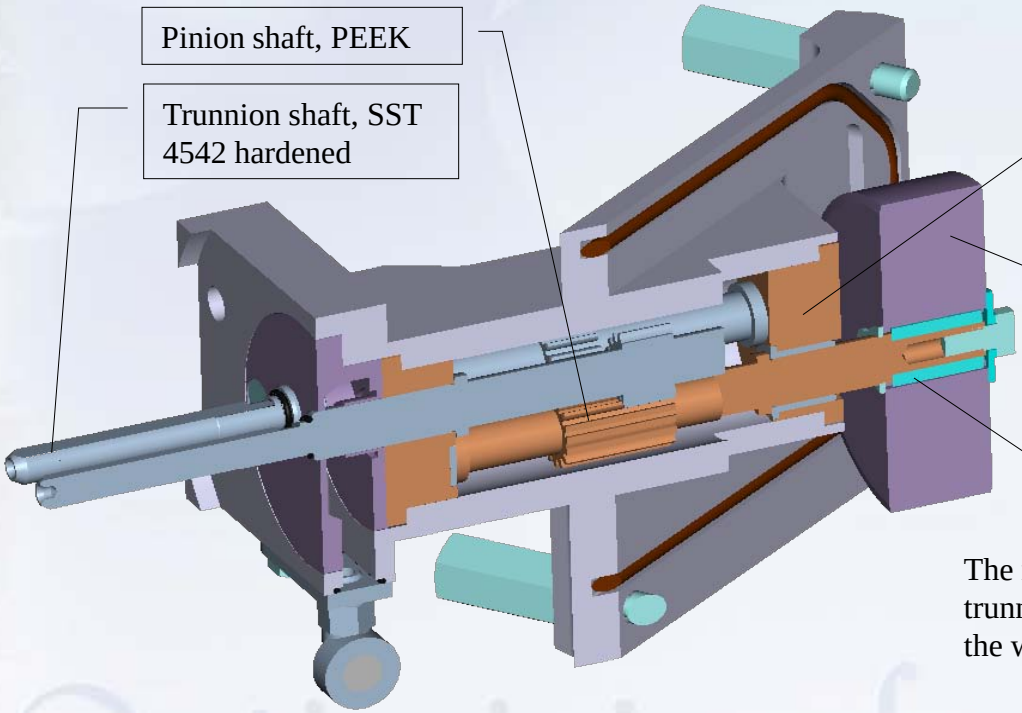

The material combination between pinion and trunnion shaft, bearing housing and flat bearing let the whole screw drive run without oil or grease

Optimizing for Success

Design Objective: Ease of dismantling

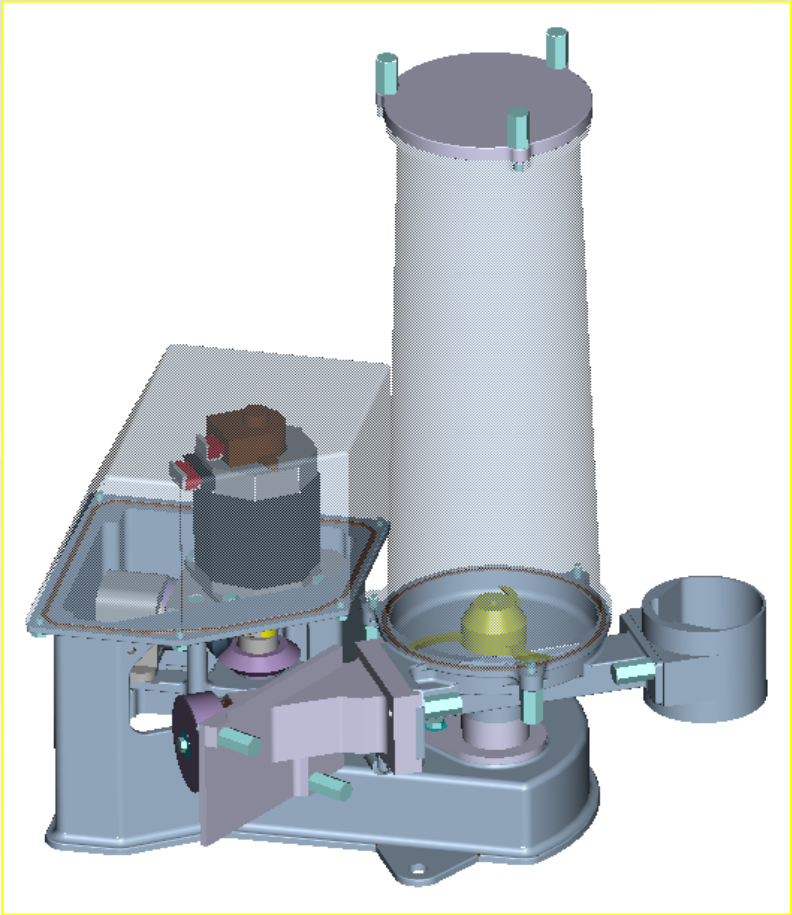

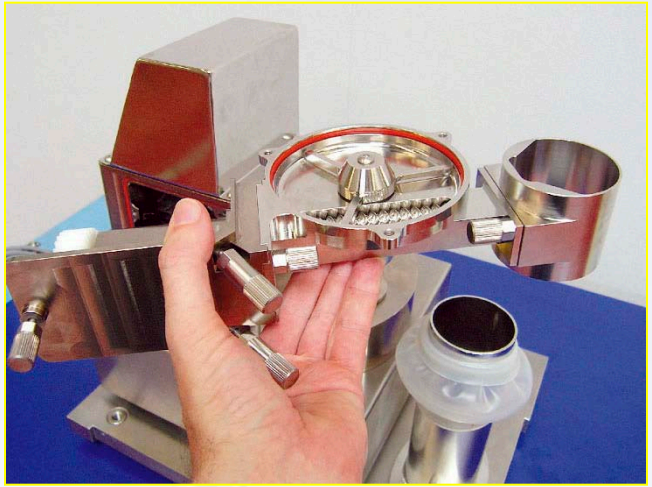

Optimizing for Success

Revisions in hopper/agitator for difficult flow materials

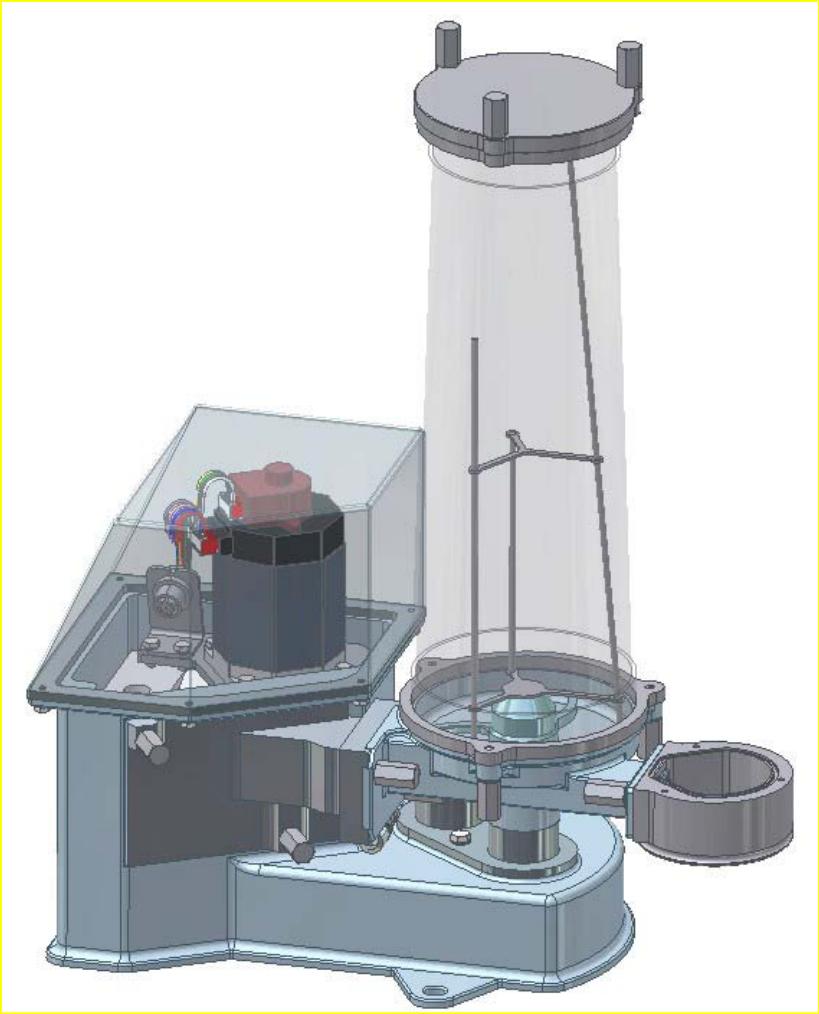

- ✓ Negative cone hopper to aid in flow
- ✓ Revised agitator extension design
- ✓ Vertical rod to prevent material from turning with agitator

Optimizing for Success

Bottom agitation

- ✓ Driven from below with sealed shaft
- ✓ Constantly scraping the bottom of hopper to minimize residual

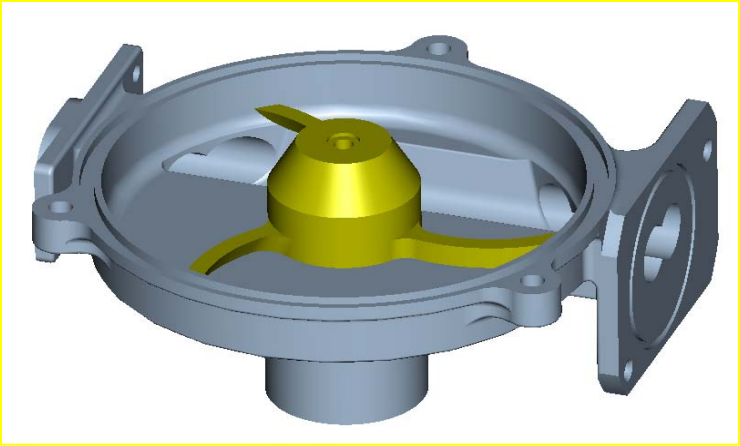

Optimizing for Success

Refill Design Options

- ✓ No refill
  - 2 liter hopper, plug in draft shield
- ✓ Manual Refill
  - Funnel allows for refill without opening draft shield – available with 1 liter and 2 liter hoppers
- ✓ Auto Refill
  - Stub and flex for connection to T20 volumetric feeder . Mount and stand of T20 custom based upon installation

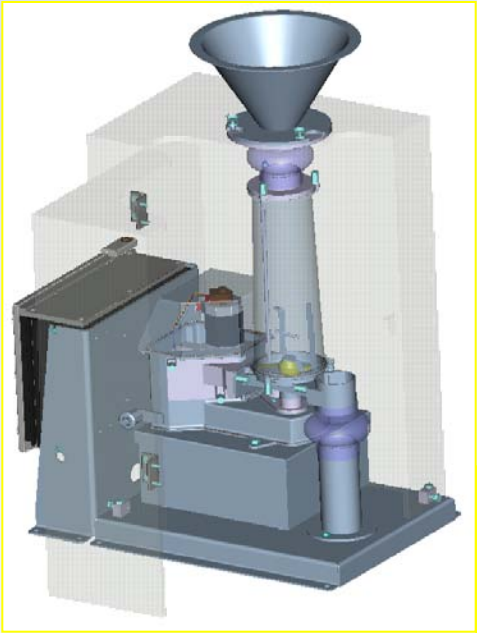

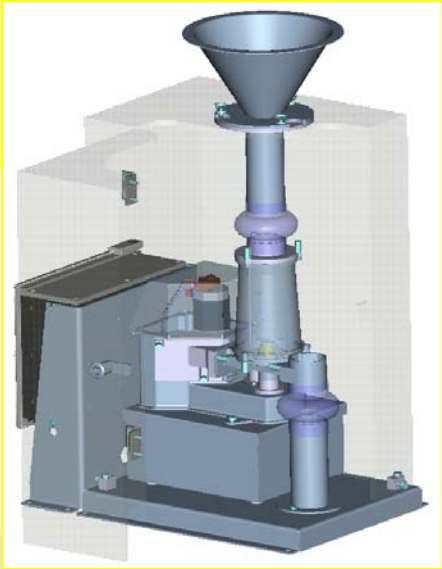

Optimizing for Success

Scale New Design features

- 12 kg load capacity
- Optimized for microfeeding (- 20 g/h)
- Better mechanical stability and accuracy
- Overload & underload protection
- Internal high flexible wiring of motor cables
  - No interference issues
- Internal air routing for purging feeder seals
- ATEX 3D (Zone 22) as standard execution
- Intrinsic safe option ATEX 2GD/Class I Div I

Optimizing for Success

Process Applications

- ✓ Micronization feeding
- ✓ Extrusion feeding
- ✓ Mechanical Mill feeding
- ✓ Delivery of potent compounds at low rates to continuous operations – mixing/blending, extrusion, etc
- ✓ Dosing systems (in some limited cases)
- ✓ Delivery of high value added compounds at low rates to a process

Optimizing for Success

Process Example - Integration with Micronizer

- ✓ Completely integrated design
- ✓ Includes controls integration for micronizer optimization

Optimizing for Success

Process Example : Integration with other feeders for feeding of continuous mixer

- ✓ Multi feeders for different ingredients
- ✓ Microfeeder used for high value ingredient , low rate feeding
- ✓ All feeders stacked up to feed direct to mixer inlet

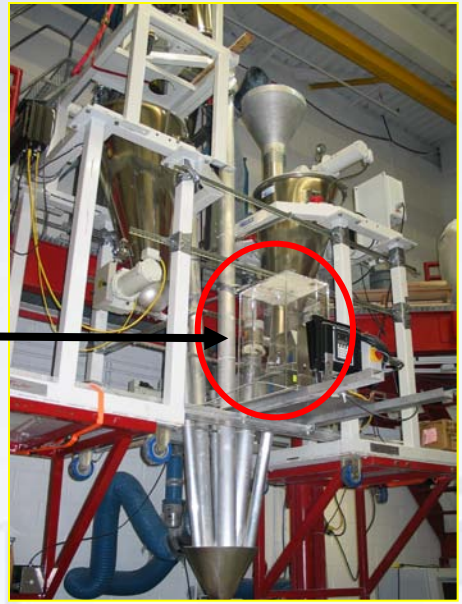

K-Tron MT12 Microfeeder

Mixer inlet

Summary

- ✓ High accuracy feeding is feasible with the K-Tron twin screw MT12 Microfeeder , at rates as low as 20 gm/hour!
- ✓ Design can be easily integrated into the process
- ✓ Several features are built in as part of the standard design to give the most versatile and easy to use feed option
- ✓ High yields/low residuals can also be obtained due to the unique design combinations of the special hopper, agitator and open bottom driven lower blade

Optimizing for Success