Twin Screw Extrusion of Aluminized Thermobaric Explosives

Mr. Michael Fair

Mr. John Bolognini

Mr. William Polwin

US Army
RDECOM – ARDEC
Picatinny Arsenal, NJ
michael.fair2@us.army.mil

Overall Project Development Strategy

Product Development

- Research and design of new products
- Lab scale production

~ 0 – 10 Kg ~

Process Development

- Material characterization
- Mathematical modeling
- Process simulation
- Pilot plant scale production

~ 10 – 500 Kg ~

Industrial Base

- Large scale production

~ over 500 Kg ~

Overall Project Development Strategy

Product Development

- Research and design of new products
- Lab scale production

~ 0 – 10 Kg ~

Process Development

- Material characterization
- Mathematical modeling
- Process simulation
- Pilot plant scale production

~ 10 – 500 Kg ~

Industrial Base

- Large scale production

~ over 500 Kg ~

Background

PAX-3 is an insensitive high explosive developed by ARDEC in the early 1990's

Bunker Defeat Munition with Aluminized Composition A-3

Bunker Defeat Munition with PAX-3

Background

PAX-3

- IM Compliant
- Multi-purpose explosive
  - Armor defeat capabilities
  - Enhanced blast capabilities
    - Bunker Defeat Munition

Formulation	wt%
➢ HMX	64.0%
➢ Al Powder	20.0%
➢ BDNPA/F	9.6%
➢ CAB	6.4%

* IMEMTS 2004 Balas et. al.

Current Manufacturing Method for PAX-3

PAX-3 is being produced in small batch sizes (15 lb batches in 5 gallon mixers) with varying degrees of success

Current difficulties of producing PAX-3

- Uses specialized solvents
  - Environmentally unfriendly
  - Increased waste treatment
- Difficulty in reaching bulk density consistently
- Coating of Al particles and not HMX particles
  - Increasing the sensitivity
  - Increasing waste
- Increase personnel/equipment interaction
  - Increase safety concerns

All the above **<u>increase final cost</u>** of PAX-3

Overall Project Development Strategy

Product Development

- Research and design of new products
- Lab scale production

~ 0 – 10 Kg ~

Process Development

- Material characterization
- Mathematical modeling
- Process simulation
- Pilot plant scale production

~ 10 – 500 Kg ~

Industrial Base

- Large scale production

~ over 500 Kg ~

Process Development Map

Science Based Approach

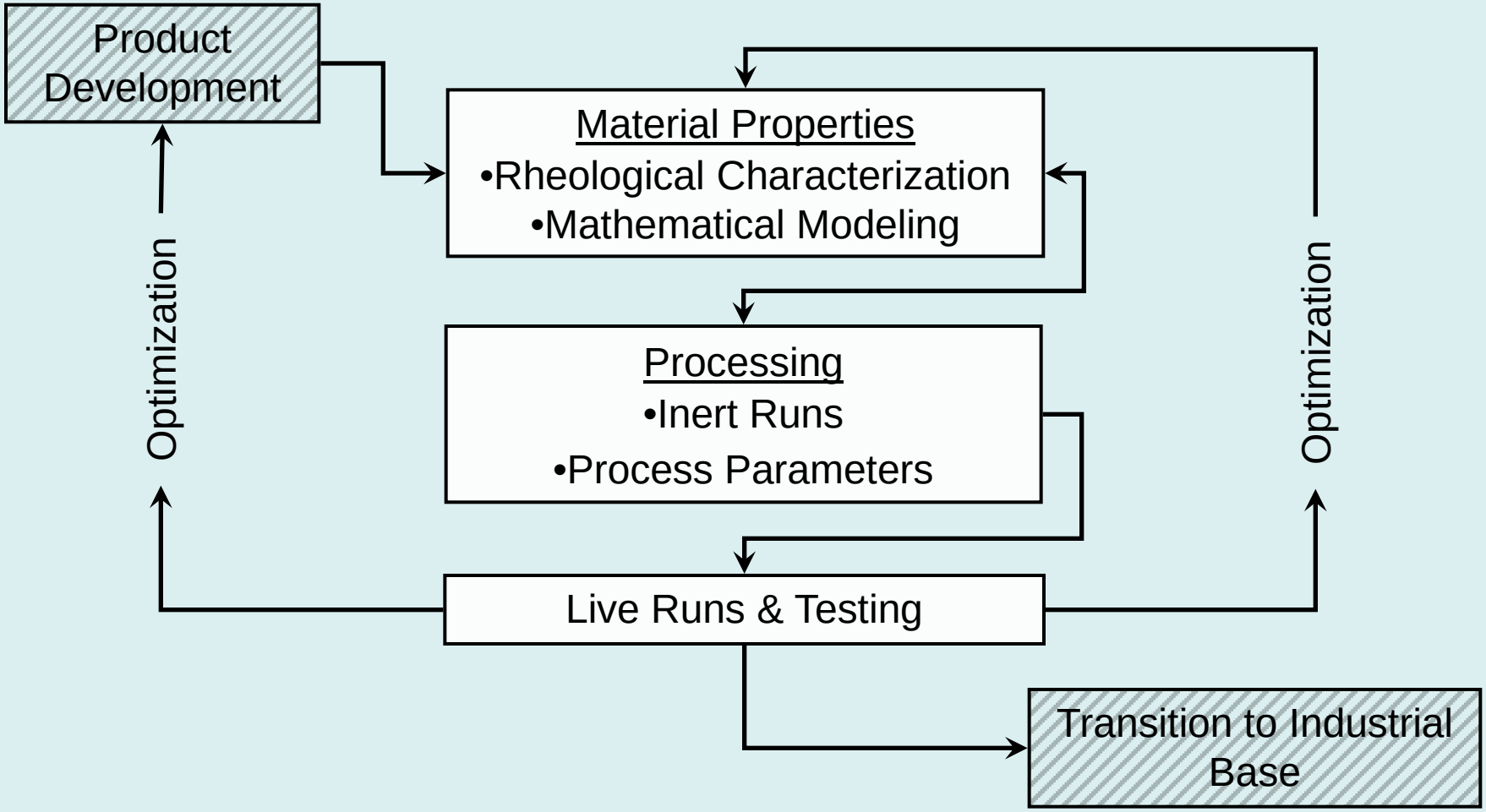

Model Predictions of PAX-3

Pressure Profile of a Mixing Zone

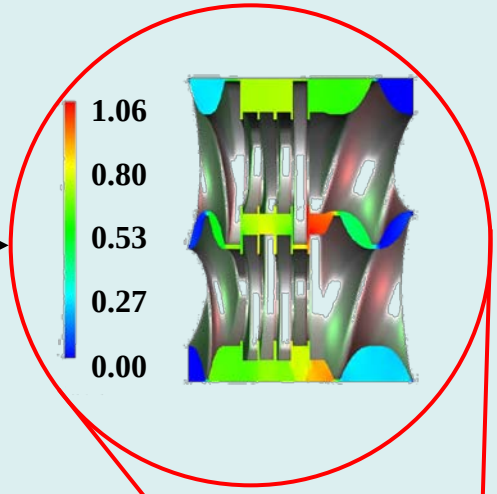

Rheological data generated at RDECOM-ARDEC is inputted into first principle model for the twin screw extruder

Velocity Profile of the Die Zone

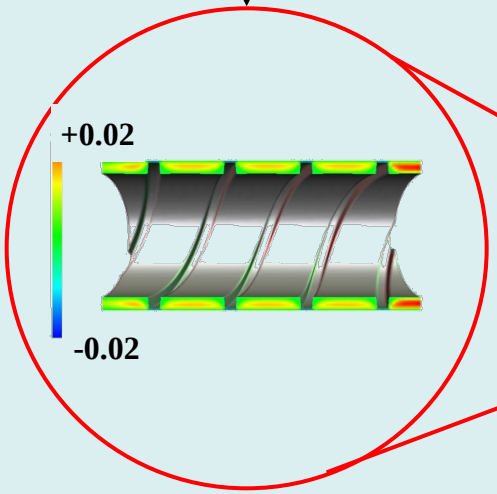

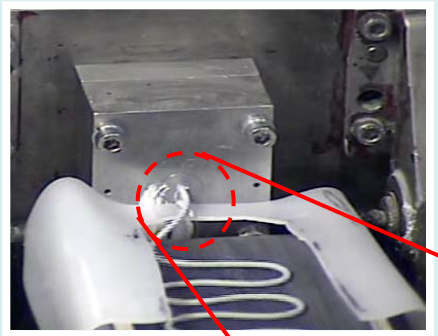

Temperature Profile of the Die

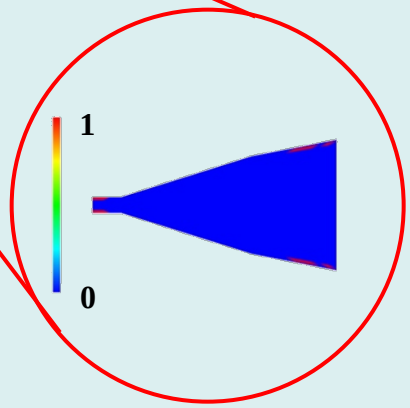

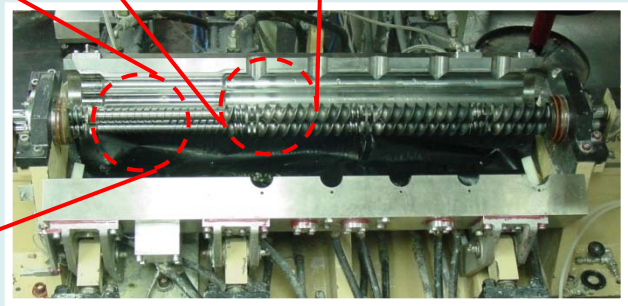

Twin Screw Extruder

Model Provided by Highly Filled Material Institute Kalyon et. al. (US ARMY Grant)

Model Predictions of PAX-3

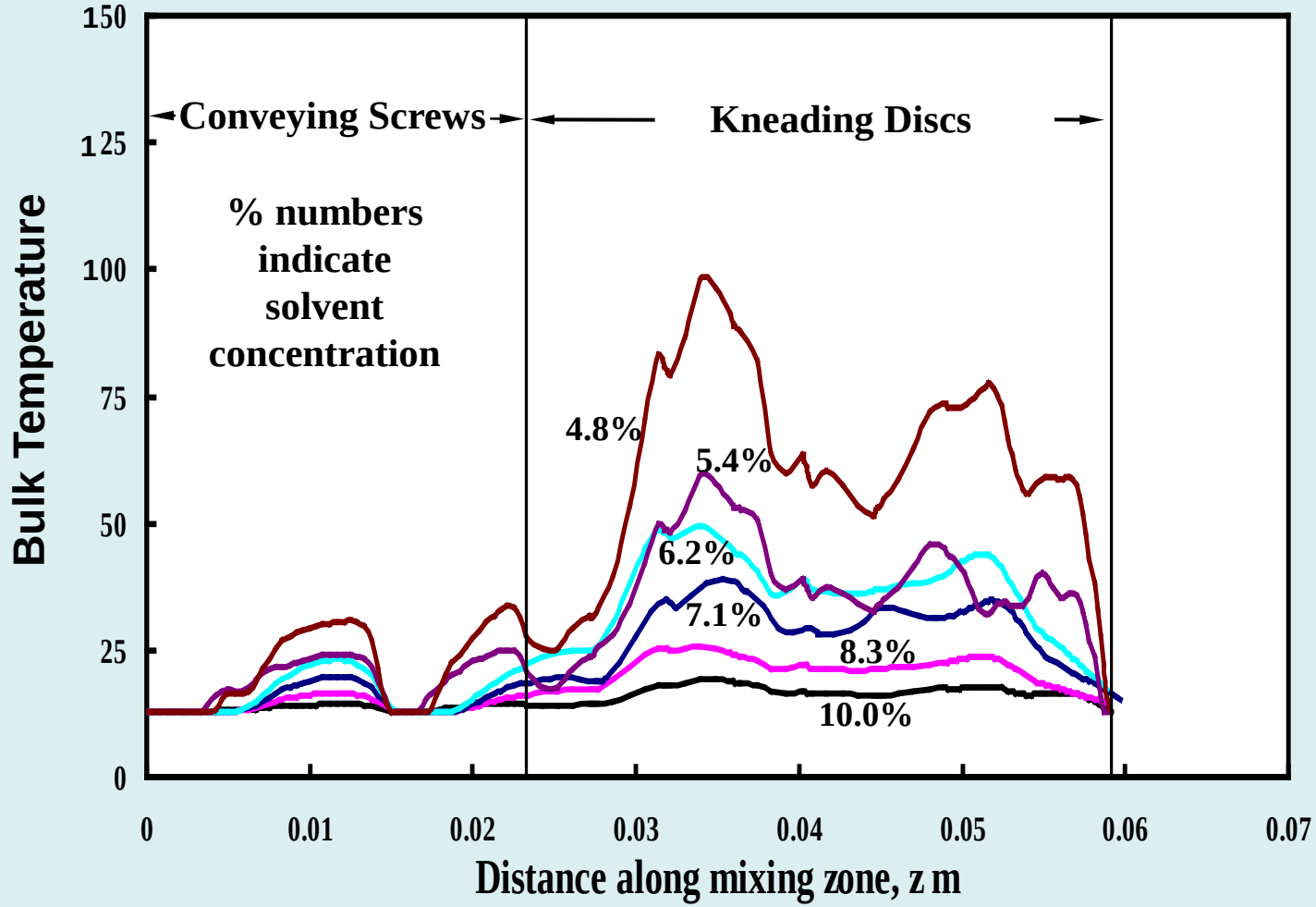

Provided by Highly Filled Material Institute Kalyon et. al.

Flow Diagram for Producing PAX-3 Through a Twin Screw Extruder

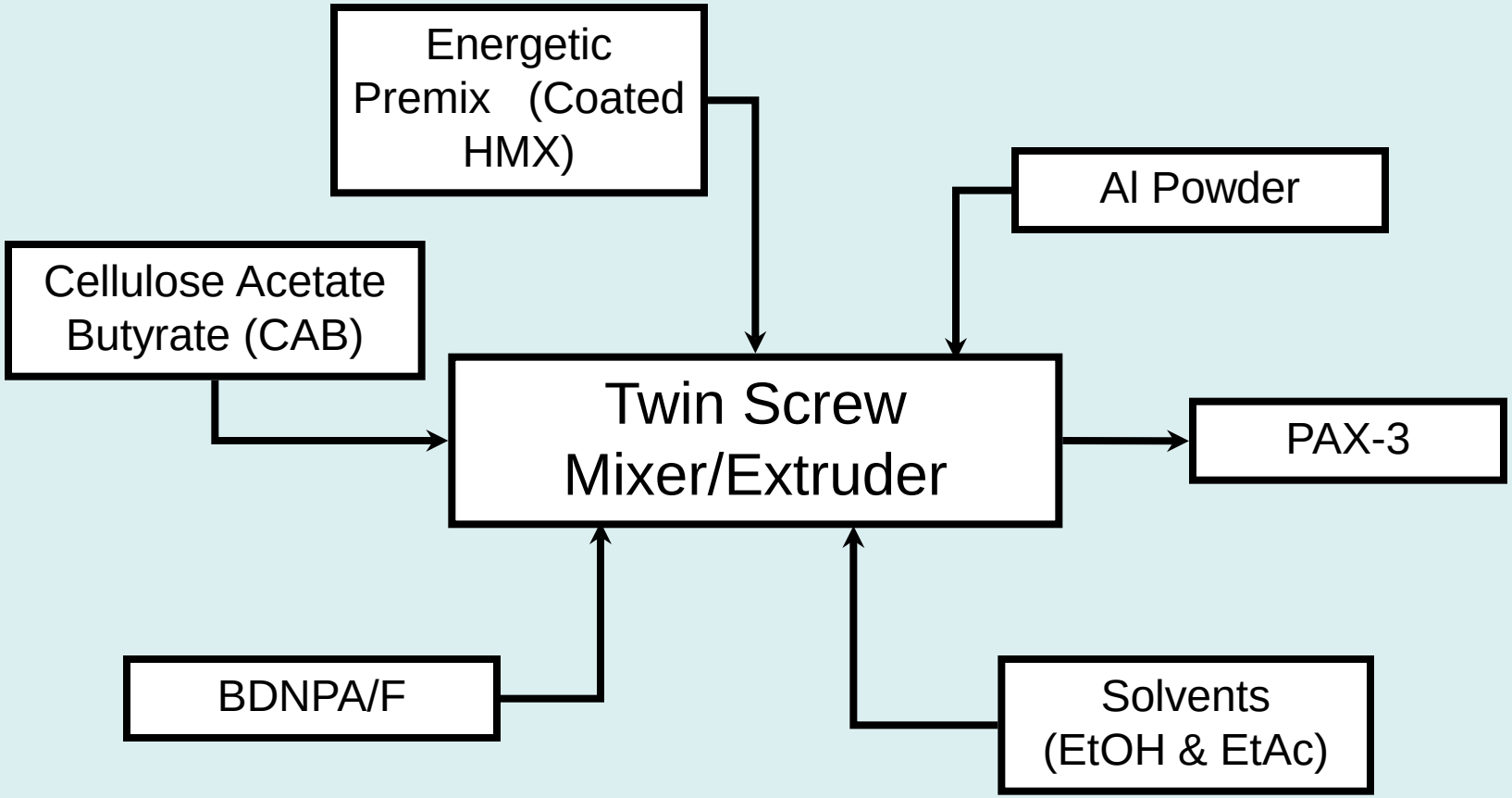

Extrusion of PAX-3

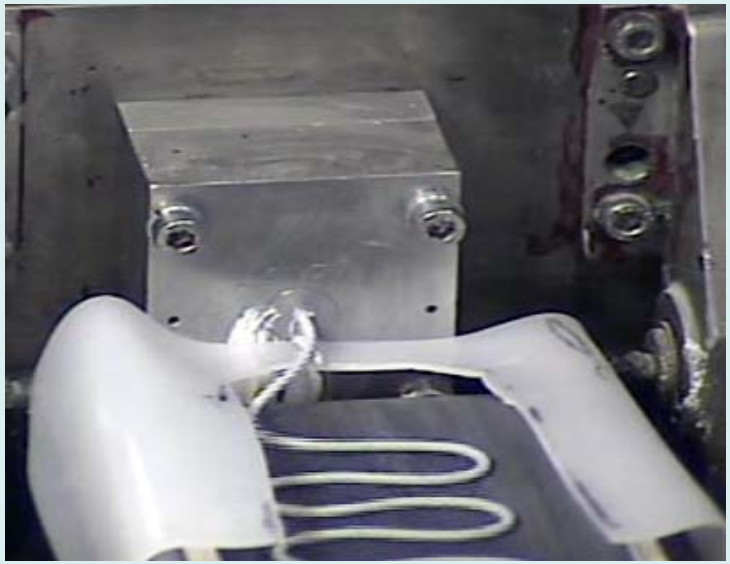

Extrusion of PAX-3

Final End Product
PAX-3

PEO Ammunition
Joint Lethality

AETC

Sensitivity Tests

Test	Result from TSE Process	Typical Results from Batch Process	Compared to other processes
ESD MIL-STD-1751A	No reaction @ 0.25J (Max of apparatus)	No Reaction @ 0.25J	Same
ABL Friction Test TB 700-2	Reaction @ 1000psi No reaction @ 750 psi	Reaction @ 750psi No Reaction @ 560psi	Better
ERL/Bruceton STANAG 4489	61.6 ± 3.7 cm	39.5 cm	Better
BAM Friction Test STANAG 4487	Reaction @ 252N No Reaction @ 240N	Reaction @ 240N No Reaction @ 216N	Better

Performance Tests

Test	Compared to other processes
IHE (in@kbar)	Comparable
Wall Velocity	Comparable
Gurney	Comparable

Composition Analysis

Component	Wt %	STD	Mil Spec
HMX	64.3	0.40	64.0
AL	19.3	0.26	20.0
BDNP A/F	9.7	0.1	9.6
CAB	6.8	0.5	6.4

Summary

- Lower cost to manufacture aluminized explosives
  - Little to no manufacturing waste
- More reliable method of manufacturing
  - Better quality product
- Greater flexibility to provide specific explosives
- Safer process

Total Project Time 4 – 6 Months

Future Work

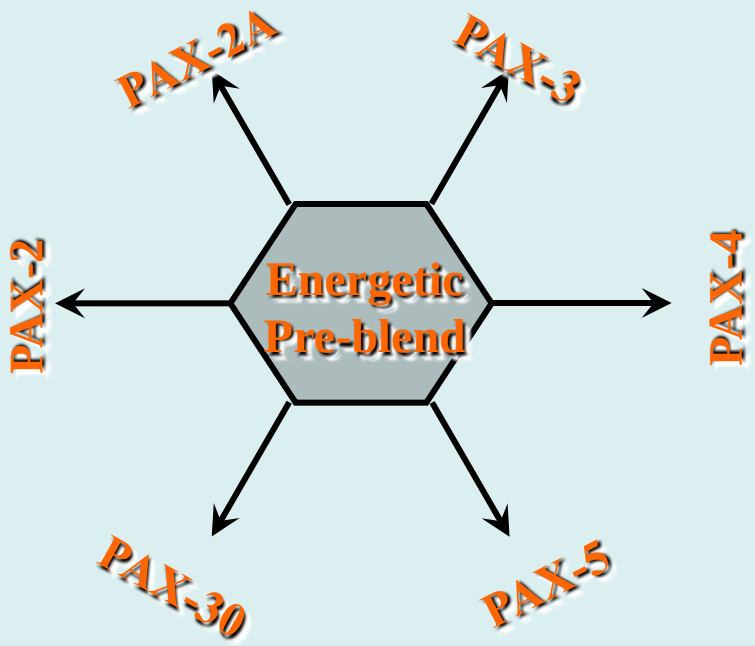
PAX-2A
PAX-3
PAX-2
Energetic Pre-blend
PAX-4
PAX-30
PAX-5

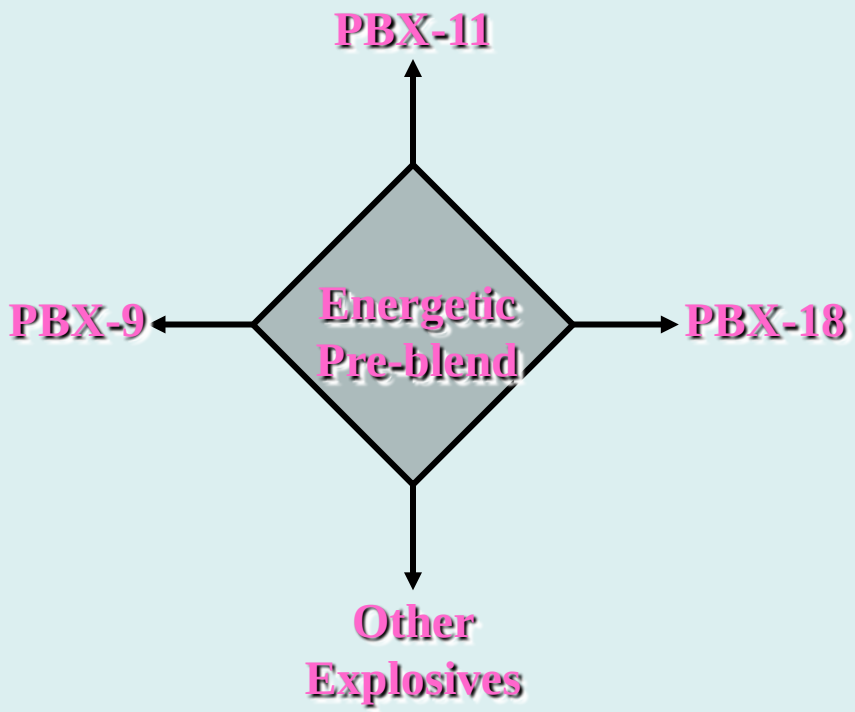
PBX-11
PBX-9
Energetic Pre-blend
PBX-18
Other Explosives

Acknowledgements

RDECOM – ARDEC

Twin Screw Extruder Team

Mr. Michael Fair
Mr. John Bolognini
Mr. William John Polwin

Research Assistants

Ms. Samantha Fong
Ms. Amanda Goon

RDECOM – ARDEC

Ms. Wendy Balas
Mr. Terry Barhite
Mr. Kenneth Chastney
Mr. Rodney Collins
Mr. Ron Dobrzelecki
Mr. David Fair

?

Sensitivity Tests
(Twin Screw Processed)

Test	Result	Compare to Batch Mixing
ESD MIL-STD-1751A	No reaction @ 0.25J (Max of apparatus)	Same
ABL Friction Test TB 700-2	Reaction @ 1000 psi No reaction @ 750 psi	*Better*
ERL/Bruceton STANAG 4489	61.6 ± 3.7 cm	*Better*
BAM Friction Test STANAG 4487	Reaction @ 252N No Reaction @ 240N	*Better*